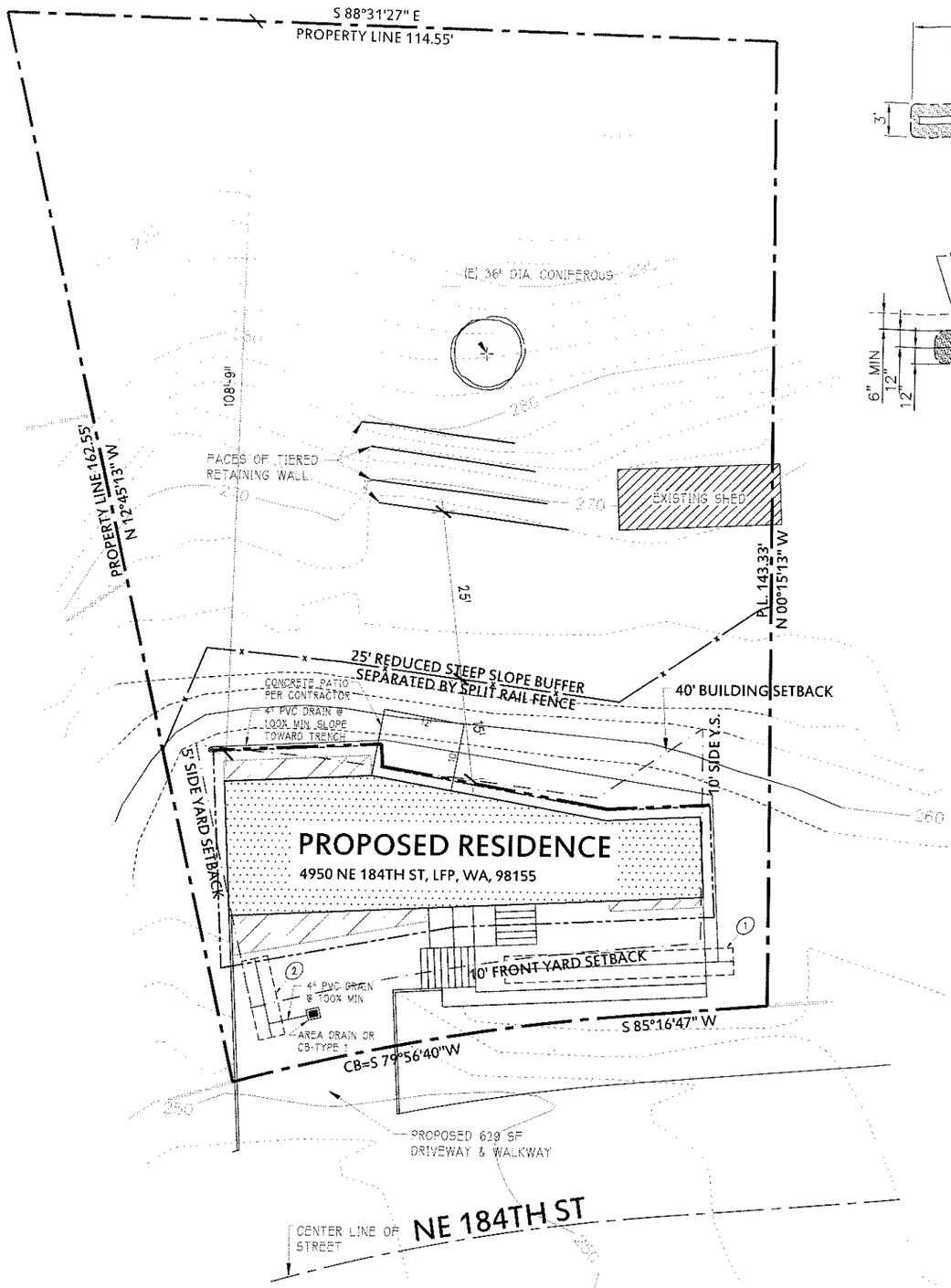

DRAINAGE PLAN

SCALE 22X34 1/8" = 1'-0"
SCALE 11X17 1/16" = 1'-0"

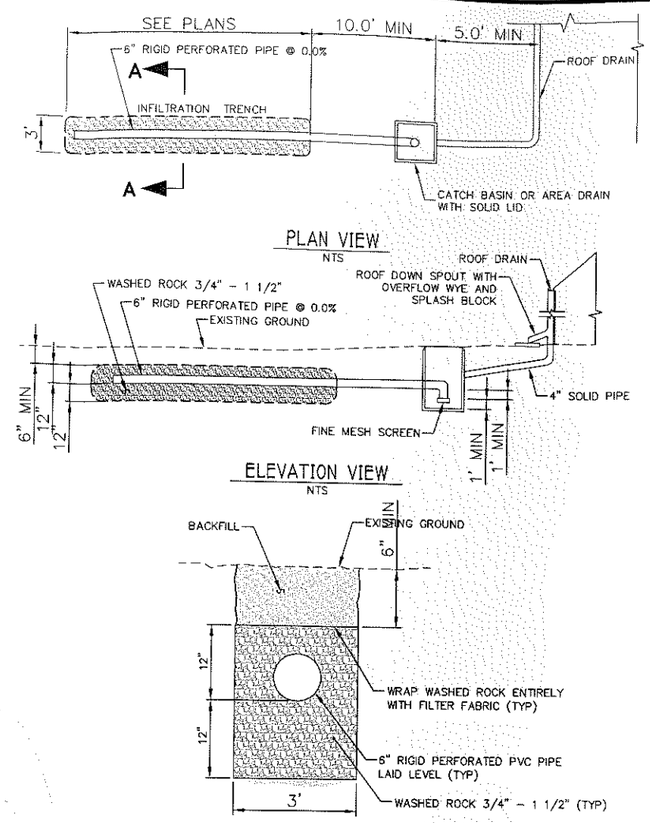

ROOF / FOOTING INFILTRATION TRENCH DETAIL (1)
SCALE: NONE

(1/S1) ROOF INFILTRATION TRENCH DETAIL
SCALE: NONE

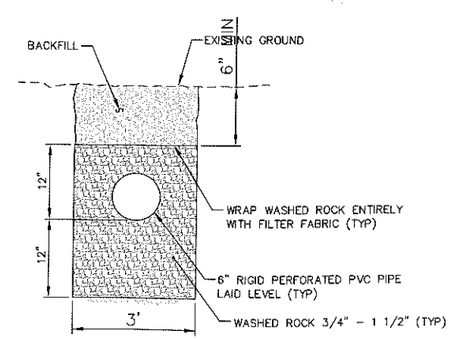

(1/S1) DRIVEWAY INFILTRATION TRENCH DETAIL
SCALE: NONE

LEGEND

- PROPERTY LINE OF PROPOSED PROJECT
- PROPERTY LINE OF ADJACENT PROPERTIES
- CONTOUR LINE - IN ELEVATION CHANGE
- CONTOUR LINE - NO ELEVATION CHANGE
- PROPOSED FENCE
- EXISTING FENCE TO BE REMOVED
- EXISTING FENCE
- NEW SINGLE FAMILY RESIDENCE FOUNDATION FOOTPRINT
- MAIN LEVEL STRUCTURE OVERHANG
- EXISTING STRUCTURE
- CENTER LINE OF STREET
- EDGE OF CONCRETE
- ROOF OUTLINE
- PROPERTY SETBACK
- EDGE OF GRAVEL
- EASEMENT
- EXISTING TREES/FOLIAGE
- GUTTER

KEYNOTES

1. INFILTRATION TRENCH 1: HOUSE/ROOF/PATIO
   SURFACE WATER (1816 SF)
   408 CUBIC FEET
   DIMENSIONS: 34'L x 4'W x 3'D
   SEE INFILTRATION TRENCH DETAIL X/XX FOR BALANCE OF INFORMATION
2. INFILTRATION TRENCH 2: PORCH/DRIVEWAY
   SURFACE WATER (629 SF)
   141 CUBIC FEET
   DIMENSIONS: 12'L x 4'W x 3'D
   SEE INFILTRATION TRENCH DETAIL X/XX FOR BALANCE OF INFORMATION

DRAINAGE BMP NOTES

BMP SIZING FOR 2445 SF REQUIRES 550 CUBIC FEET OF TRENCHING

- TRENCHES TO BE INSTALLED TO THE STANDARDS SET IN FIGURE C.2.2.A (KCSWDM)
- ROOF RUNOFF TO BE DIRECTED THROUGH DOWNSPOUTS AND TIGHT LINED TO TRENCH
- YARD CATCH BASINS ALSO TO BE TIGHT LINED TO TRENCH
- FOOTING DRAINS ARE TO BE CONNECTED DOWNSTREAM TO PREVENT BACKUP
- DRIVEWAY RUNOFF TO PASS THROUGH CATCH BASIN FITTED WITH DOWNWARD TURNED ELBOW
- TRENCHES TO BE PLACED 5' MINIMUM FROM PROPERTY LINES
- GRAVEL MATERIAL TO BE WASHED DRAIN ROCK WITH A 0.30 VOID RATIO
- TRENCH TO BE COVERED WITH FILTER FABRIC BEFORE BACKFILL
- FOOTING DRAINS TO CONNECT DOWN STREAM FROM DOWN SPOUTS.

REV	DATE	DESCRIPTION
0	05.26.16	ISSUED FOR PERMIT

YEN DESIGN INC
WWW.YENDES.COM
18211 HOMEVIEW DR.
EDMONDS, WA 98026
PHONE (425) 387-9595

A NEW SINGLE FAMILY CONSTRUCTION:
4950 NE 184TH ST
CHRIS AND BETH VALLEY

DRAINAGE PLAN

DRAWN BY	A.M.S.
ARCHITECT	A.M.S.
ENGINEER	A.M.G.
JOB NO.	Y-16-005
SHEET SIZE	22"x34"
SHEET	OF 16

C1.4