William Popp Associates *Transportation Engineers/Planners*

(425) 401-1030
FAX (425) 401-2125
e-mail: info@wmpoppassoc.com

TRAFFIC IMPACT ANALYSIS

for

Lake Forest Condos
14727 35th Ave NE, Lake Forest Park, WA

Prepared for:

Mr. Andy Wang
Forza Homes Inc.
22902 74th Ave W
Edmonds, WA 98026

Prepared by:

William Popp Associates
14-400 Building, Suite 206
14400 Bel-Red Rd
Bellevue, WA 98007

May 21, 2015

TABLE OF CONTENTS

INTRODUCTION **1**

A. EXISTING CONDITIONS **1**

1. SITE SERVICES INVENTORY 1
2. TRAFFIC VOLUMES 4
3. LEVEL-OF-SERVICE 6
   - Table 1 Intersection Level-of-Service Criteria 7
   - Table 2 Existing Intersection Level-of-Service (Year 2015) [a, b] 8
4. SIGHT DISTANCE 9

B. FUTURE CONDITIONS **9**

1. BACKGROUND TRAFFIC VOLUMES 9
2. PROJECT TRIP GENERATION 10
   - Table 3 Project Trip Generation 10
3. TRIP DISTRIBUTION AND TRAFFIC ASSIGNMENT 11
4. BACKGROUND TRAFFIC PLUS PROJECT TRAFFIC VOLUMES 11
5. LEVEL-OF-SERVICE (2017 WITH AND WITHOUT PROJECT) 11
   - Table 4 2017 Future Intersection Level-of-Service (AM and PM Peak Hour) [a] 12
6. QUEUES 13
   - Table 5 Lake Forest Park -- Queue Estimates [a] 13

C. CONCLUSIONS **14**

1. PROJECT DETAILS 14
2. TRAFFIC VOLUMES 14
3. TRANSIT AND NON-MOTORIZED TRIPS 15
4. PROJECT TRIP GENERATION 15
5. PROJECT TRIP DISTRIBUTION AND ASSIGNMENT AND NEIGHBORHOOD IMPACTS 15
6. ARTERIAL INTERSECTION PROJECT VEHICULAR IMPACT 16
7. LEVEL OF SERVICE 16
8. SIGHT DISTANCE 17
9. QUEUES 17

D. MITIGATION AND RECOMMENDATIONS **17**

INTRODUCTION

The following report was prepared in order to address the traffic related impacts of the proposed new Lake Forest Park Condominium development in the city of Lake Forest Park. A vicinity map is shown in Figure 1.

This study evaluates the project's AM and PM peak hour impacts at three off-site intersections identified by the City. These include SR 522/NE 153rd St, SR 522/NE 147th St (PM only), and SR 522/NE 145th St. The study also includes a review of project traffic impact on neighborhood roadways in the vicinity of the site.

Project Identification

The Lake Forest Condos project would be constructed on a single parcel, 156810-0670, located at 14727 35th Ave NE. The total parcel area is 8,706 gsf and there is currently one vacant/abandoned single family home on the property.

The proposed project will consist of 16 condominium units. There will be a 22-stall parking garage on the ground floor. The parking garage will take access to 35th Ave NE with a 20-foot wide driveway that is proposed at 33 feet from the south property line to center of driveway.

The site plan is presented in Figure 2.

A. EXISTING CONDITIONS

1. Site Services Inventory

Roadways

Key roadways serving the site are discussed below.

SR 522 is a 5- to 6-lane principal arterial (major highway) in the vicinity of the project. Side street access for local street and driveways is typically restricted to right-in and right-out movements with some designated left turn pockets. SR 522 consists of two general purpose lanes each direction, plus a designated bus lane (outside lane) in the southbound direction. There are bus pullouts at bus stops for the northbound direction. The posted speed limit is 40 mph north of NE 145th St and 35 mph south of it.

NE 145th St is a 4-lane arterial west of SR 522 (outside the City limits) and a 2-lane local access roadway east of SR 522 (south City limits boundary line). The roadway east of SR 522 is straight but with a vertical curve between SR 522 and 37th Ave NE. In this section, the roadway is approximately 22 feet wide with sporadic gravel shoulders, along with fog

WILLIAM POPP ASSOCIATES
Transportation Planners & Engineers

www.wmpoppassoc.com

Bellevue, WA
425.401.1030

VICINITY MAP

Figure 1

Lake Forest Condos
14727 35th Ave NE
16 Units

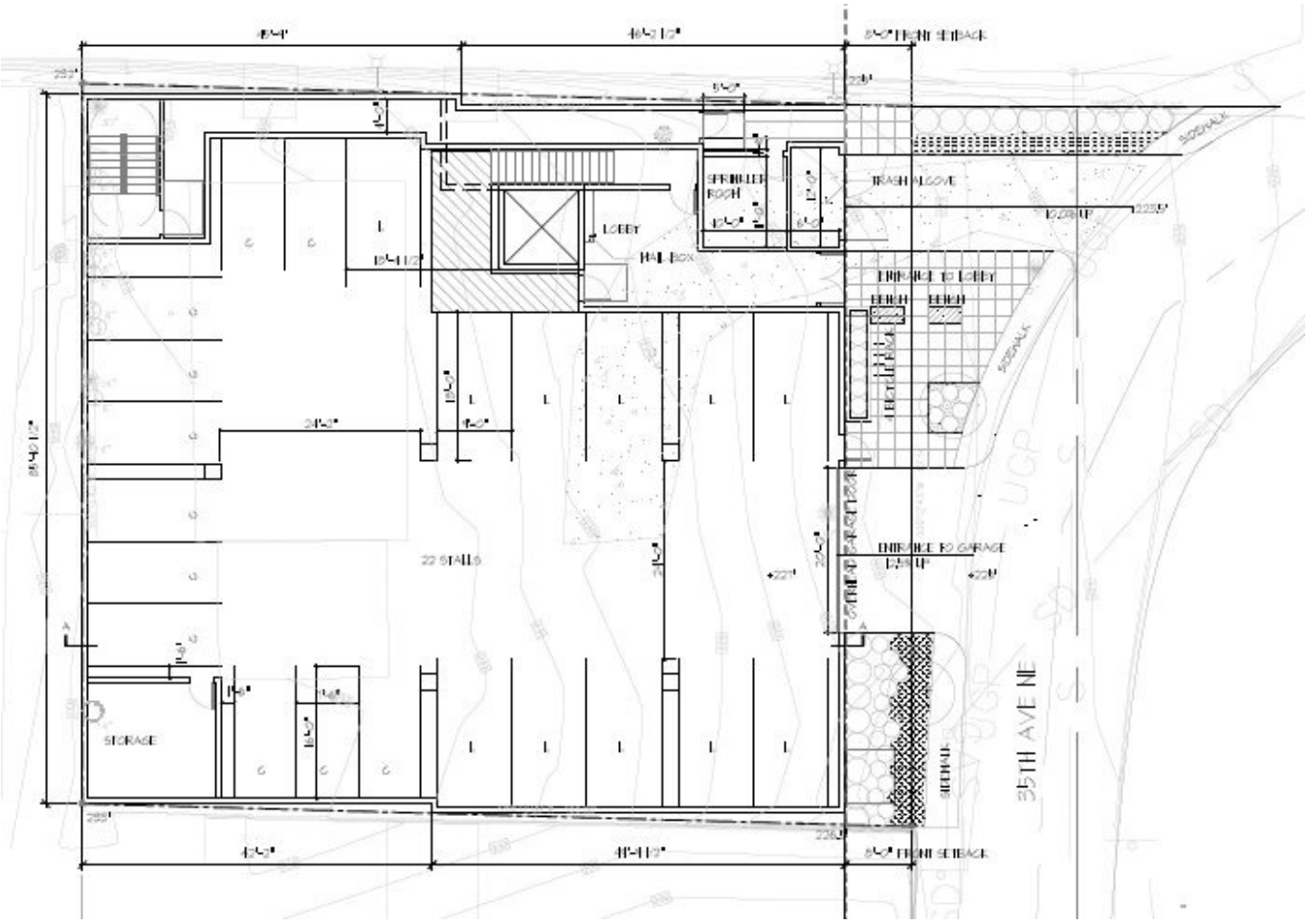

WILLIAM POPP ASSOCIATES
Transportation Planners & Engineers

www.wmpoppassoc.com Bellevue, WA 425.401.1030

SITE PLAN

Figure 2

Lake Forest Condos
14727 35th Ave NE
16 Units

lines and a yellow center skip strip. The posted speed is 25 mph this section. The Southern Gateway Village project will be improving the roadway along its' frontage southside.

NE 153rd St is a two-way east-west local access roadway with no access (dead-end) east of 37th Ave NE. The roadway has a relatively steep downgrade east of 37th Ave NE. The speed limit is 25 mph.

35th Ave NE is a two-way north-south local access roadway that connects between NE 147th St and NE 148th St. The roadway is paved approximately 18- to 20-feet in width, is level, and has no channelization markings. There are sporadic gravel shoulders in some areas that are being used for parallel parking just off the roadway pavement. The posted speed limit is 25 mph.

NE 147th St is a two-way east-west local access roadway that connects between SR 522 and east past NE 37th St. In the vicinity of 35th Ave NE, the roadway is 24 to 26 feet wide with some parallel parking (on gravel on north side and on the pavement south side) west of 35th Ave NE. East of 35th Ave NE the roadway narrows to 22 feet approximately and has some vertical curves nearing 37th Ave NE. The north section of this roadway east of 35th Ave NE is presumed to be improved with the Southern Gateway Village development. The posted speed limit is 25 mph.

NE 148th St is a two-way east-west local access roadway that connects between 35th Ave NE and east towards Lake Washington, with some steep slopes nearing 38th Pl NE. In the vicinity of the site, the roadway is approximately 24 wide with parallel parking (on gravel/paved areas outside both sides of the roadway. The posted speed limit is 25 mph.

NE 150th St (north of NE 148th St) & 37th Ave NE (south of NE 153rd St) are two-way north-south local access roadways that provide connection between NE 148th St and NE 153rd St. The roadway is residential in character, roadway pavement is approximately 28 feet in width (for the majority). There are curb, gutter for most of the section as well. The roadway grade is curvilinear both horizontally and vertically. The posted speed is 25 mph.

37th Ave NE (south of NE 147th St) is a north-south two-way local access street. The roadway is straight but has a relatively steep incline from NE 147th St to NE 145th St. The roadway width is 22 to 24 feet wide with some gravel shoulder areas for parallel parking. The posted speed limit is 25 mph.

Intersection Geometrics and Signal Operations

The SR 522/NE 153rd St intersection is signalized. The roadway channelization is:

- Northbound approach – four lane with u-turn pocket, two thru lanes and small right turn pocket that extends through the intersection to a bus stop zone.
- Southbound approach – four lane approach including a left turn lane (u-turns permitted), two thru lanes, and a bus only lane.
- Westbound approach – a single lane approach for left and right turn movements.
- The signal operates as an actuated signal. It includes protected left-turn and u-turn phasing for the north and south approaches, the east approach is obviously split phase. There are pedestrian crosswalks on the north and east legs only.

The SR 522/NE 145th St intersection is signalized. The roadway channelization is:

- Northbound approach – four lane with left turn pocket, two thru lanes and bus only lane that transitions into a right turn pocket. The bus lane extends approximately 290 feet north of the intersection where it then merges with the two thru lanes.
- Southbound approach – four lane approach including a left turn lane (u-turns permitted), two thru lanes, and a bus lane that transitions into a right turn pockets. The bus lane does not extend through the intersection.
- Eastbound approach – a three lane approach with a left turn lane, a shared left/thru lane, and a right turn pocket.
- Westbound approach – a three lane approach with a left turn pocket, a thru lane, and a right turn pocket.
- The signal operates as an actuated signal. It includes protected left turn phasing for the north and south legs, the east and west approaches are split phase. There are pedestrian crosswalks all legs.

The SR 522/NE 147th St intersection is non-signalized. The roadway channelization is:

- Northbound approach – two thru lanes.
- Southbound approach – four lane approach including a left turn pocket, two thru lanes, and a bus only lane.
- Westbound approach – a single lane approach with stop sign. The only permitted movement is a right turn.
- This intersection is side-street stop control. The southbound left turn is of course a yield movement.

Other two-way stop control intersections include:

- 35th Ave NE at NE 147th St.

- 37th Ave NE at NE 147th St.
- 37th Ave NE at NE 153rd St.

The intersection of NE 145th St/37th Ave NE is an all-way stop control intersection. The intersections of NE 150th St/37th Ave NE and NE 148th St/NE 150th St have no designated sign controlled movements.

Pedestrian Facilities

The pedestrian facilities in the neighborhood areas east of SR 522 are limited with minimal shoulder and sidewalk locations. However, all of the roadways are local access type streets and are presumed to be low volume streets thus walking along the edge of the roadway is presumed to be adequate.

SR 522 has sidewalks on both sides of the roadway. There are pedestrian crosswalks at the adjacent signalized intersections at NE 153rd St and NE 145th St.

Transit Service

Transit service in the region is provided by the King County Department of Transportation (Metro Transit) and Sound Transit. There are bus stops on both sides of SR 522 at the NE 153rd St intersection. The stops serve Metro Routes 308, 309, 312, and 372 and Sound Transit Route 522.

There are three bus stops in the vicinity of the SR 522/NE 145th St intersection. The bus stop on SR 522 just north of NE 145th St serves Metro Routes 308, 309, 312, and 372 and Sound Transit Route 522. The bus stop on SR 522 just south of NE 145th St serves Metro Routes 309, 312, 330, and 372 and Sound Transit Route 522. The bus stop on NE 145th St just west of SR 522 serves Metro Routes 308, and 330.

2. Traffic Volumes

Existing AM and PM peak hour turning movement counts were collected Tuesday May 19, 2015 at each of the analysis intersections, except at the SR 522/NE 145th St location for the AM peak period where an older count (Nov-2013) was provided by the City.

The 2013 AM count at SR 522/NE 145th St was adjusted for selected heavier movements on SR 522 and west leg of NE 145th St in an effort to match the two-way volumes on SR 522 south of NE 153rd St from the recent count this month.

All of the peak hour turning movement counts are presented in Attachment 1 of the Technical Appendix.

A summary of the existing 2015 AM and PM peak hour volumes at the analysis intersections are presented in Attachment 2 of the Technical Appendix.

Several daily counts were collected by WPA from WSDOT for the approaches at the signalized intersections analyzed in this TIA. The daily counts are a bit old, of the 2011 and 2012 era, however the intent is to show the hourly fluctuations by approach at each location.

The first figure shows the volumes at the SR 522/SR 523 (aka NE 145th St) intersection.

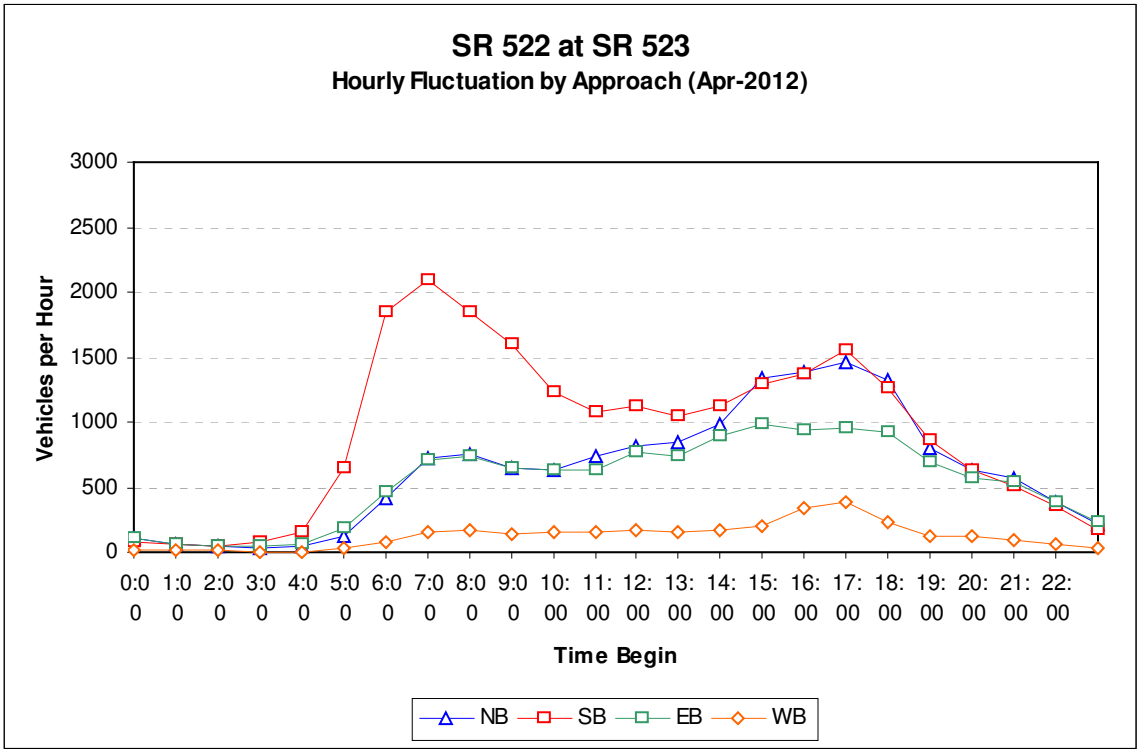

Figure 3

As shown in Figure 3, there is a pronounced heavy volume southbound in the AM however, for the PM peak period the volume is almost the same. The eastbound approach volume also peak in the PM period, as well as the westbound approach.

The second figure shows the volumes at the SR 522/NE 153rd St intersection.

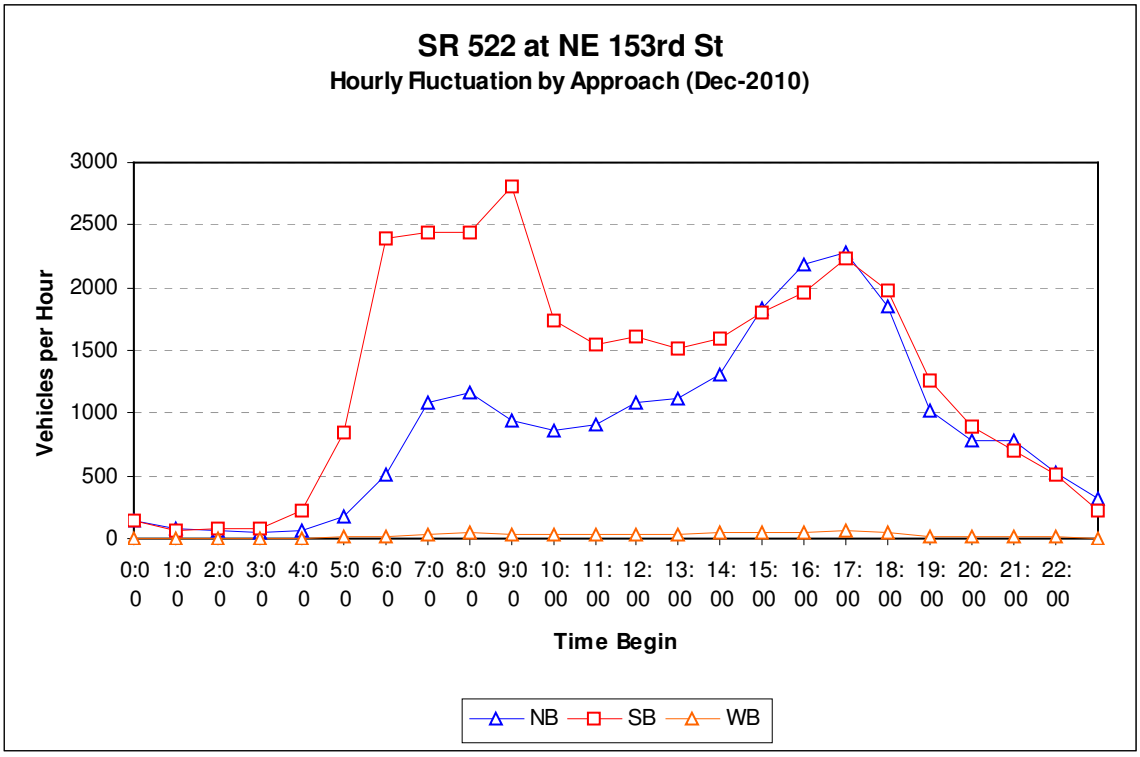

Figure 4

Similar to Figure 4, there is a pronounced heavy volume southbound in the AM however, for the PM peak period the volume is almost the same.

3. Level-of-Service

Level-of-service (LOS) is a term defined by transportation and traffic engineers as a qualitative and quantitative measure of operational conditions within a traffic stream and the perception of these conditions by motorists and/or passengers. There are several quantitative indices utilized depending on the type of intersection control present. There are six levels-of-service that are given letter designations from "A" to "F", with "A" being the best, or minimum delay conditions, and "F" being the worst, with maximum delay or jammed conditions. LOS "C" or "D" is generally considered acceptable for planning and design purposes, while LOS "E" represents operating conditions at or near capacity with freedom to maneuver being extremely difficult.

Level-of-service for the existing condition was calculated using Trafficware's Synchro software. This software replicates the analytical procedures specified in the Highway Capacity Manual. The level of service criteria are shown in Table 1. Level-of-service for signalized and non-signalized intersections is quantified in terms of vehicular delay. Delay, measured in terms of time (seconds), also represents driver discomfort, frustration, excess fuel consumption and lost travel time.

Table 1
Intersection Level-of-Service Criteria

Level of Service	Definition	Stopped Delay Per Vehicle[1] signalized	non-signalized
A	Little or no delay	Less than 10.0 sec	Less than 10.0 sec
B	Short traffic delays	10.1 to 20 sec	10.1 to 15 sec
C	Average traffic delays	20.1 to 35 sec	15.1 to 25 sec
D	Long traffic delays	35.1 to 55 sec	25.1 to 35 sec
E	Very long traffic delays	55.1 to 80 sec	35.1 to 50 sec
F	Extreme delay	Greater than 80 sec	Greater than 50 sec

[1] Delay; seconds per vehicle

Note that for signalized intersections, the delay presented represents the overall operation of the intersection, whereas the delay presented for unsignalized intersections represents the delay for the critical approach or movement. The results are presented in this manner since the overall intersection delay at a non-signalized intersection is generally quite good because the major through street maneuvers are not impeded and for the most part carry the majority of the traffic. It is also important to note that the level of service results from the Synchro output do not fully take into consideration the queue spill back from upstream or downstream signalized intersections and the additional congestion that may occur.

The existing level of service at the analysis intersections is presented in Table 2.

Table 2
Existing Intersection Level-of-Service (Year 2015) [a, b]

Intersection	Traffic Control	LOS	Delay[a]	Comments
AM PEAK HOUR [c]				
SR 522/NE 153rd St	Signal	A	8.2	all approaches (signal)
SR 522/NE 147th St	SB Left	n/a	n/a	AM analysis not required
	WB Right	n/a	n/a	" " " " "
SR 522/NE 145th St	Signal	D	41.9	all approaches (signal)
PM PEAK HOUR [c]				
SR 522/NE 153rd St	Signal	B	12.3	all approaches (signal)
SR 522/NE 147th St	SB Left	D	31.5	left turn yield
	WB Right	E	37.6	side street stop
SR 522/NE 145th St	Signal	E	71.7	all approaches (signal)

a LOS and Delay; delay represented in seconds per vehicle. LOS and delay represent overall intersection approach delay.
b All counts were conducted May 19, 2015, except for the AM count at SR 522/NE 145th St which was adjusted to 2015 from a Nov-2013 count.
c The AM and PM peak hours are in general the peak one hour between 7:00-9:00am, and 4:00-6:00 pm.

The SR 522/NE 153rd St signalized intersection is estimated to operate at LOS A for the AM peak hour and LOS B for the PM peak hour. It is important to note that the delay presented in Table 2 and the corresponding LOS is representative for the whole intersection, all approaches. The LOS analysis assumes an actuated-uncoordinated signal with a cycle length of 180 seconds for both the AM and PM peak hours. The cycle length was observed for the PM peak and assumed for the AM peak.

At the SR 522/NE 147th St intersection, only analyzed for the PM peak hour, the southbound left turn movement is estimated to operate at LOS D. The westbound right turn movement from NE 147th St is estimated to operate at LOS E. The City indicated that no LOS analysis was required for the AM peak hour. Excess delay can be incurred due to queue spill back from NE 153rd St, however, in certain situations when this occurred, southbound left turn movements and westbound right turn movements were observed to be waived across or waived in the queue.

The SR 522/NE 145th St signalized intersection is estimated to operate at LOS D for the AM peak hour and LOS E for the PM peak hour. Again, the delay and LOS is representative for the whole intersection, all approaches. The LOS analysis assumes an actuated-uncoordinated signal with an observed cycle length of 220 seconds for the PM peak hour and an assumed 180 second cycle for the AM intersection cycle length.

The existing level of service results are presented in Attachment 3 of the Technical Appendix.

4. Sight Distance

There are two sight distance parameters generally applicable to new access scenarios. One is intersection (or entering) sight distance (ISD/ESD) from project driveways and the other is stopping sight distance (SSD). For a low volume driveway such as the one proposed accessing a low volume residential street, typically only the stopping sight distance condition is considered.

The radius of the 35th Ave NE/NE 148th St curve is approximately 55 feet along the center of road. The calculated design speed for this conditions with 0% superelevation is approximately 15 mph (per AASHTO Exhibit 3-16). Based on a design speed of 15 mph, the minimum required stopping sight distance is 80 feet. Assuming a 20 mph speed, the SSD is 110 feet.

Given the proposed location of the project driveway, 33 feet north of south property line, the estimated sight line looking northeast to NE 148th St is approximately 110 feet. The sight line looking south extends all the way to NE 147th St.

A sight distance sketch is included in Attachment 5 of the Technical Appendix.

B. FUTURE CONDITIONS

1. Background Traffic Volumes

Background traffic volumes are typically estimated by factoring the existing traffic volumes by historical traffic growth rate(s) to the project's horizon year and adding in known pipeline development proposals. The project's estimated horizon year was assumed to be 2 years out from this study date, thus 2017.

The City's Southern Gateway Sub-Area Plan Draft EIS for traffic forecasts indicates that growth on SR 522 would range between approximately 0.2% to 0.4% per year from 2012 to 2030. Traffic growth for the area east of SR 522 was assumed to be negligible except for known development such as the Southern Gateway Village development.

The recent PM turning movement counts conducted at the three SR 522 intersections of the study area when compared against the 2012 counts in the Draft EIS indicate a mix of positive and negative growth. The PM total entering volume at the SR 522/NE 153rd St intersection increased slightly at 0.16% from 2012 to 2015. The PM volume at the SR 522/NE 147th St intersection was down 3.8%, and the PM volume at the SR 522/NE 145th St intersection was down 6.1%.

For this analysis, the 2015 counts were used as the basis for all future forecasts. The 2013 AM count at the SR 522/NE 145th St intersection which was used for this study, was adjusted to 2015 to match the south leg volumes (to a closer degree) at the SR 522/NE 153rd St intersection. The annual growth rate assumed was 0.5% per year for all SR 522 through traffic, 0.5% per year for all traffic on NE 145th St (SR 523) west of SR 522, and 1.0% per year for all roadways east of SR 522.

The Southern Gateway Village project trips were included in the 2017 background volume forecasts. An estimate of AM trips for this development assumed 70% of the PM traffic with all movements in the reverse direction.

Year 2017 AM and PM background volumes are presented in Attachment 2 of the Technical Appendix.

2. Project Trip Generation

The Lake Forest Condos plat consists of 16 new condominium units. There is one vacant and abandoned home on the site that will be demolished. However, for this traffic study, no trip credit adjustment was assumed for the home removed, as it may have been vacant for quite some time.

The trip generation estimates are based on the ITE Trip Generation manual 8th Edition for Land Use Code 230; Condominium/Townhome (ITE LUC 230). The trip generation estimates for the project are presented in Table 3.

Table 3
Project Trip Generation

ITE Code	Land Use Size		AWT	AM Peak Total	AM Peak In	AM Peak Out	PM Peak Total	PM Peak In	PM Peak Out
ITE LUC 230:	Condominium/Townhome 16 units								
		Rate	5.81	0.440	0.170	0.830	0.520	0.670	0.330
		Vol	93	7	1	6	8	5	3

As shown in Table 3, the project site is estimated to generate 93 average weekday daily trips, 7 AM, and 8 PM peak hour trips.

As noted above, for the future operations analysis summarized later herein, no trip credit was taken for the home removed and subsequent trip removed as it is assumed the home has been vacant for more than a few years, plus the credit is really an insignificant difference not worth discussion or analysis.

3. Trip Distribution and Traffic Assignment

The project trip distribution percentages for AM and PM peak hour analysis were based on traffic volumes of the major roadways in the site vicinity, as well as professional judgment regarding known significant employment and socio/rec/shop opportunities.

This analysis assumes 25% of the project trips to/from the north on SR 522, 35% of the project trips to/from the south on SR 522, and 40% of the project trips to/from the west on NE 145th St

The AM and PM peak hour project trips are presented in Figure 5.

4. Background Traffic Plus Project Traffic Volumes

Year 2017 PM peak hour with-project traffic volumes were developed by adding project trips to the year 2017 background traffic volumes.

The traffic volume increases at each of the analysis intersections is relatively insignificant. The impact at each are discussed as follows:

- ✓ SR 522/NE 153rd St. The total entering volume for the PM peak hour in 2017 with project is 4,242. The project volume at this intersection is 2 PM peak hour trips (also 2 for the AM peak hour). The resultant project volume impact is 0.05%.

- ✓ SR 522/NE 147th St. The total entering volume for the PM peak hour in 2017 with project, excluding the SB through volume, is 2,613. The project volume at this intersection is 6 PM peak hour trips (3 for the AM peak hour). The resultant project volume impact is 0.23%.

- ✓ SR 522/NE 145th St. The total entering volume for the PM peak hour in 2017 with project is 4,582. The project volume at this intersection is 6 PM peak hour trips (5 for the AM peak hour). The resultant project volume impact is 0.13%.

The Year 2017 AM and PM peak hour with project volumes are shown in Attachment 2 of the Technical Appendix.

5. Level-of-Service (2017 with and without Project)

Level-of-service for the 2017 with- and without-project conditions were calculated for the subject analysis intersections. The results of the analysis are presented in Table 4. For comparison purposes, level-of-service values for 2015 are also presented. All of the

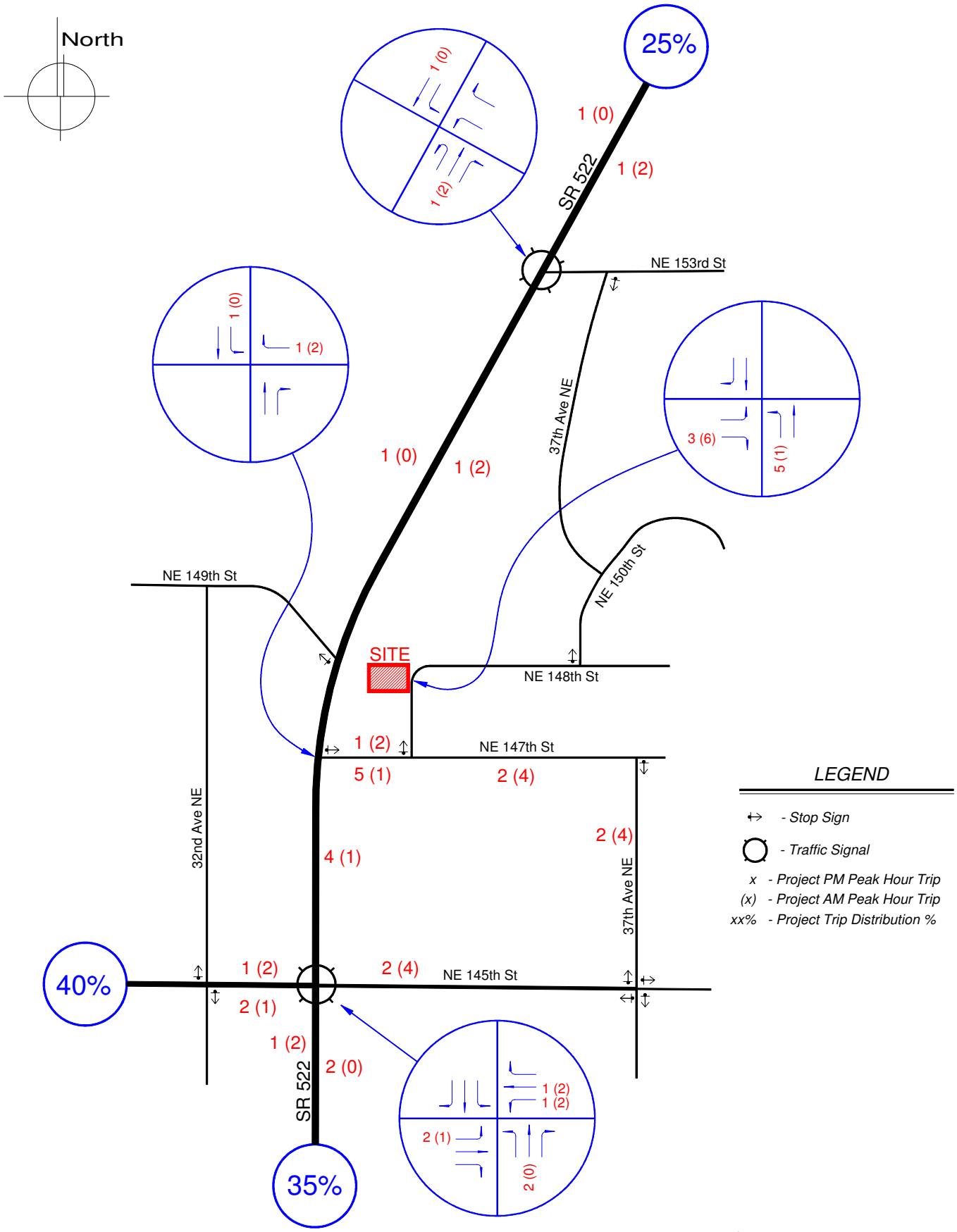

WILLIAM POPP ASSOCIATES
Transportation Planners & Engineers
www.wmpoppassoc.com
Bellevue, WA
425.401.1030

PROJECT TRIP DISTRIBUTION & ASSIGNMENT

Figure 5

Lake Forest Condos
14727 35th Ave NE
16 Units

future level of service calculations assume existing geometric and signal operations conditions.

Table 4
2017 Future Intersection Level-of-Service (AM and PM Peak Hour) [a]

Intersection	2015 [b] Existing	2017 [c] Background	2017 w/Project	Comments
AM PEAK HOUR				
SR 522/NE 153rd St	A 8.2	A 8.5	A 8.5	all approaches (signal)
SR 522/NE 147th St	n/a n/a	n/a n/a	n/a n/a	southbound left
	n/a n/a	n/a n/a	n/a n/a	westbound right
SR 522/NE 145th St	D 36.8	D 44.4	D 44.6	southbound approach
PM PEAK HOUR				
SR 522/NE 153rd St	B 12.3	B 13.0	B 14.5	all approaches (signal)
SR 522/NE 147th St	D 31.5	D 32.5	D 32.9	southbound left
	E 37.6	E 39.1	E 39.7	westbound right
SR 522/NE 145th St	E 71.7	E 76.2	E 76.6	southbound approach

[a] LOS and Delay; delay represented in seconds per vehicle. LOS and delay represent overall intersection approach delay.
[b] All counts were conducted May 19, 2015, except for the AM count at SR 522/NE 145th St which was adjusted to 2015 from a Nov-2013 count.
[c] The background traffic forecast assumes 0.5%/yr on SR 522 and SR 523, and 1.0%/yr on all roadways east of SR 522. Southern Gateway Village is included in the background forecasts.

The SR 522/NE 153rd St signalized intersection is estimated to operate at LOS A for the AM peak hour and LOS B for the PM peak hour for both existing and future project horizon year conditions. It is important to note that the delay presented in Table 2 and the corresponding LOS is representative for the whole intersection, all approaches.

At the SR 522/NE 147th St intersection, only analyzed for the PM peak hour, the southbound left turn movement is estimated to operate at LOS D. The westbound right turn movement from NE 147th St is estimated to operate at LOS E. The City indicated that no LOS analysis was required for the AM peak hour.

The SR 522/NE 145th St signalized intersection is estimated to operate at LOS D for the AM peak hour and LOS E for the PM peak hour. Again, the delay and LOS is representative for the whole intersection, all approaches.

The site access is assumed to operate at LOS A, however no level of service analysis was conducted.

All of the level of results are included in Attachment 3 of the Technical Appendix.

6. Queues

A queue summary analysis is included for all of the level of service analysis conditions. A summary of some of the key locations are presented in Table 5 below.

Table 5
Lake Forest Park -- Queue Estimates [a]

Approach	Available Storage	2015 Existing Avg Q	2015 Existing 95th Q[b]	2017 without Project Avg Q	2017 without Project 95th Q[b]	2017 with Project Avg Q	2017 with Project 95th Q[b]
SR 522/NE 153rd St							
Northbound Thru (PM Peak)	1,650+ [b]	1,246	#1,726	1,272	#1,753	1,291	#1,754
SR 522/NE 147th St							
Southbound Left (PM Peak)	230	n/a	19	n/a	19	n/a	20
Westbound Right (PM Peak)	270+ [c]	n/a	29	n/a	31	n/a	32
SR 522/NE 145th St							
Westbound Left (PM Peak)	110	72	125	86	143	87	146
Westbound Thru (PM Peak)	900+ [d]	126	196	149	225	151	225
Westbound Right (PM Peak)	200	289	#472	310	#511	310	#511

a 95th Q = 95th percentile queue. All numbers are in feet.
b Roadway distance from NE 147th St to NE 153rd St. These are two thru lanes, not pockets, thus length could in theory extend back to NE 145th St (next signal) which is an additional 700 feet. Total distance between NE 145th St and NE 153rd St is approximately 2,350 feet.
c This is the distance of NE 147th St from SR 522 to 35th Ave NE. NE 147th St extends east 1,000' +.
d This is the distance of NE 145th St thru lane from SR 522 to the all-way stop at 37th Ave NE.
sign indicates queue exceeds storage capacity, actual queue may be longer.

As shown in Table 5, there are a few instances where average queue and 95th percentile queues exceed link length or turn pocket storage length.

The northbound thru queue on SR 522 and NE 153rd St is estimated to extend back (south) on average approximately 1,300 feet for future conditions with project. The 95th percentile queue is estimated to extend south past NE 147th St. The average queue or the 95th percentile queue does not significantly change with project traffic.

The estimated queues for conditions with project at the SR 522/NE 147th St intersection are estimated to be adequate in so much as they are predicted to be less than the storage available, in particular the southbound left turn pocket. The southbound left queue may be longer than shown in Table 5 as northbound queues begin to block the left-turn-across movement, however, as traffic slows to a stop, it is assumed that northbound motorists will permit (allow space) for vehicles to make a left turn across during peak congestion. It is also estimated that during peak congestion, motorists turning right from NE 147th St to SR 522 will be waived in during stopped queue conditions on SR 522. In any case, the

increase queue length (average or 95th) is not estimated to significantly different with or without project traffic.

At the SR 522/NE 145th St intersection, the queue analysis is shown for only the westbound approach. The queue results in the appendix identify results for all movements. For the westbound approach, the average queue for the left turn pocket is estimated to be less than the storage available, however, the 95th percentile queue is estimated to be longer, for all cases. The 95th percentile queue is estimated to only increase by 3 feet with project traffic. For the westbound through lane movement, not a storage pocket, the queue is not estimated to significantly increase with project traffic. The westbound right turn queue is estimated to exceed storage for both the average and 95th percentile queue. However, with the project the queue does not change. This is due to the fact there are no project trips estimated to use the right turn pocket.

The queue results are included in Attachment 4 of the Technical Appendix.

C. CONCLUSIONS

1. Project Details

The proposed project will consist of 16 condominium units. There will be a 22-stall parking garage on the ground floor. The parking garage will take access to 35th Ave NE with a 20-foot wide driveway that is proposed at 33 feet from the south property line to center of driveway.

The project would be constructed on a single parcel, 156810-0670, located at 14727 35th Ave NE. The total parcel area is 8,706 gsf and there is currently one vacant/abandoned single family home on the property.

2. Traffic Volumes

The PM peak hour volume on SR 522 in the vicinity of the project is estimated to be approximately 4,100 vehicles per hour (vph) in 2017 (2,540 vph northbound, and 1,560 vph southbound +/-). The AM peak hour volume in 2017 is estimated to be 3,500 vph (1,250 northbound, and 2,250 southbound). The peak hour volume peak direction is near capacity for the roadway.

The estimated volume on NE 147th St east of SR 522 is approximately 90 vehicles during the PM peak hour (40 westbound, 50 eastbound). This roadway is generally a residential character type street, daily volumes are not estimated to exceed 2,000 vehicles per day which is typically a rule-of-thumb measurement for a residential livable street. A PM peak hour volume of 90 vehicles would translate into approximately 900 vehicles per day.

3. Transit and Non-Motorized Trips

The area is well served by transit including five routes north and south on SR 522 with bus stops in the vicinity of the project. The southbound stop is accessible via signalized crossing at the SR 522/NE 153rd St intersection.

There are sidewalks on both sides of SR 522 for safe pedestrian access. The neighborhood roadways east of SR 522 within vicinity of the site are neighborhood roadways that are safe for pedestrian walking, even though no designated sidewalks or walkways exist.

4. Project Trip Generation

With 16 new condominium units, the project is estimated to 93 average weekday daily trips, 7 AM, and 8 PM peak hour trips.

This project volume estimate is considered an insignificant traffic increase to the neighborhood roadways as well as arterial roads and intersections.

For comparison discussion, it is important to note the City's Southern Gateway Sub-Area Plan DEIS has identified existing 2012 and future 2030 traffic (Preferred Alternative) for the area that this project is located in. The area is identified as Zone 15, which is bound by SR 522 to the west, 35th Ave NE to the east, NE 148th St to the north, and NE 147th St to the south. All of the current land uses in this zone are estimated to generate 41 PM peak hour trips. The 2030 Preferred Alternative assumes redevelopment of this zone to include 52 low-rise dwelling units, 2,879 gsf retail, and 5,758 gsf office space. The total trip generation for this zone in 2030 is estimated to be 54 PM peak hour trips.

It is assumed that this project, 16 condominium units (low rise in general), is consistent with the assumptions of the City's DEIS.

5. Project Trip Distribution and Assignment and Neighborhood Impacts

The project's trip distribution pattern assumed a 25% - 75% distribution north and respectively for project trips.

For the trips north, that would consist of 2 peak hour trips (AM or PM). It is assumed these trips would use NE 147th St to SR 522 in lieu of access through neighborhood roadways to NE 153rd St. Travel time estimates and predictions suggest that with SR 522 conditions per the LOS calculations, the SR 522 route is approximately 50 seconds faster than local access streets, thus it is estimated that minimal trips from the project would use the local access connection. Of course with heavier than predicted congestion on SR 522, the alternate local access route may become more appealing. Nevertheless, the estimated

number of trips from the project is only 2 peak hour trips for either the AM or PM peak hour, thus even with the 'diversion' the impact is insignificant.

For trips to/from the south, that would equate to 6 PM and 5 AM peak hour trips, which split to lesser numbers at the SR 522/NE 145th St intersection. The volume entering the site are all assumed to turn right from SR 522 to NE 147th St and then to the project. For project trips exiting the site, they will be required to traverse NE 147th St east, then 37th Ave NE south, then NE 145th St west. The estimated peak hour volume is 2 trips for the PM and 4 trips for the AM. Again, these low project volumes should be considered insignificant to overall roadway volume impacts.

6. Arterial Intersection Project Vehicular Impact

The project's vehicular impact at the three analysis intersections is summarized herein and is discussed as a percent of total vehicles entering the intersection.

At the SR 522/NE 153rd St intersection, the total future 2017 entering volume is estimated at 3,558 vph for the AM peak hour and 4,242 for the PM peak hour. The project volume is 2 peak hour trips for either peak hour, resulting in a percent impact of only 0.06% and 0.05% respectively.

At the SR 522/NE 147th St intersection, the total future 2017 entering volume is estimated at 4,186 vph for the PM peak hour. The project volume is 6 peak hour trips for the PM peak (2 for the AM peak), resulting in a percent impact of only 0.14%.

At the SR 522/NE 145th St intersection, the total future 2017 entering volume is estimated at 3,938 vph for the AM peak hour and 4,582 for the PM peak hour. The project volume is 5 AM and 6 PM peak hour trips, resulting in a percent impact of only 0.13% and 0.13% respectively.

7. Level of Service

An AM and PM peak hour level of service analysis was conducted at the following three intersections: 1) SR 522/NE 153rd St, 2) SR 522/NE 147th St (PM only), and 3) SR 522/NE 145th St.

At the SR 522/NE 153rd St intersection, the intersection is estimated to operate at LOS A for the AM peak hour and LOS B for the PM peak hour for existing and future year conditions. It should be noted the level of serve as presented represents the overall intersection, some movements are worse.

At the SR 522/NE 147th St intersection, analyzed only for the PM peak hour, the southbound left turn movement is estimated to operate at LOS D for existing and future

conditions. The westbound right turn movement from NE 147th St to SR 522 is estimated to operate at LOS E for all conditions.

At the SR 522/NE 145th St intersection, it is estimated to operate at LOS D for the AM peak hour and LOS E for the PM peak hour. Again, the delay and LOS is representative for the whole intersection, all approaches. Some movements will be worse.

8. Sight Distance

A sight distance evaluation was conducted for stopping sight distance conditions (SSD) only since the roadways that the project takes access to are neighborhood local access type streets. Assuming the site access driveway is located per the details on the site plan included in this study, the SSD looking to the northeast through the 35th Ave NE/NE 148th St curve is approximately 110 feet. The roadway curve follows a centerline radius of about 55 feet. That would equate to a design speed of 15 mph. The minimum required SSD per a 15 mph design speed is 80 feet, thus the SSD should be adequate. Assuming a 20 mph speed, the minimum SSD is 110 feet, thus the available SSD is adequate up through a 20 mph design speed. Vegetation cutback and/or removal would be required to increase the sight line and SSD.

9. Queues

An analysis of queuing for both average queue and 95th percentile queue was conducted at selected movements at each of the three analysis intersections. The full summary of queue results are included in the appendix. The results of the queue analysis indicate that the project will not significantly increase any of the queue lengths (average or 95th) for those reported movements.

D. MITIGATION and RECOMMENDATIONS

Based on the foregoing traffic impact analysis findings for the Lake Forest Condos project, it is concluded that the project traffic impacts, LOS and resulting queues are insignificant and are not likely to exacerbate or create any additional significant traffic congestion or safety problems.

It is presumed that the project will construct frontage improvements in conjunction with City standards along 35th Ave NE and through the 35th Ave NE/NE 148th St curve including new asphalt, curb, gutter, and sidewalk the frontage length.

TECHNICAL APPENDIX
for
TRAFFIC IMPACT ANALYSIS

for

Lake Forest Condos
14727 35th Ave NE, Lake Forest Park, WA

May 21, 2015

ATTACHMENTS:

1. AM and PM Peak Hour Traffic Counts
2. AM and PM Peak Hour Turn Movements (Existing 2015, 2017 Background, and 2017 with Project Conditions)
3. AM and PM Peak Hour Level of Service Results
4. Queue Results
5. Site Access Sight Distance Sketch

ATTACHMENT 1

AM and PM Peak Hour Traffic Counts

SR 522
NE 153RD ST

Date: Tue, May 19, 2015
Count Period: 7:00 AM to 9:00 AM
Peak Hour: 7:00 AM to 8:00 AM

N

Peak Hour

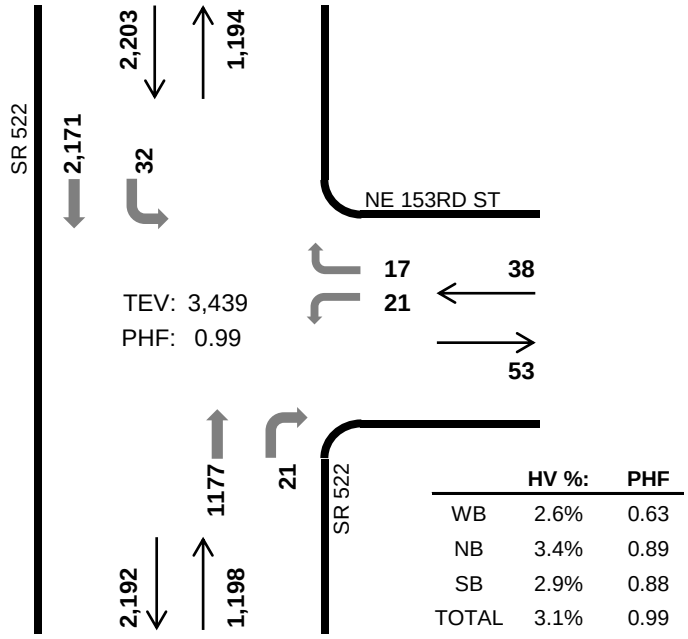

	HV %:	PHF
WB	2.6%	0.63
NB	3.4%	0.89
SB	2.9%	0.88
TOTAL	3.1%	0.99

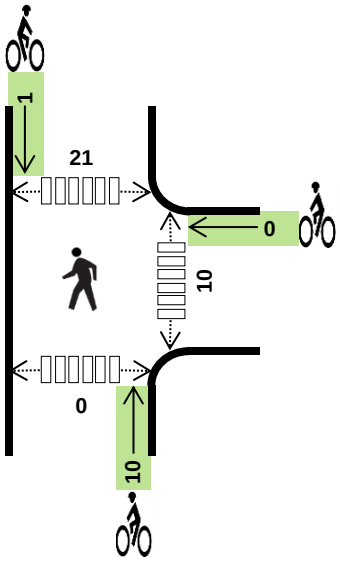

Two-Hour Count Summaries

Interval Start	NE 153RD ST Eastbound			NE 153RD ST Westbound			SR 522 Northbound			SR 522 Southbound			15-min Total	Rolling One Hour
	LT	TH	RT	LT	TH	RT	LT	TH	RT	LT	TH	RT		
7:00 AM	**0**	**0**	**0**	**2**	**0**	**0**	**0**	**242**	**1**	**3**	**620**	**0**	**868**	
7:15 AM	**0**	**0**	**0**	**7**	**0**	**7**	**0**	**301**	**4**	**9**	**525**	**0**	**853**	
7:30 AM	**0**	**0**	**0**	**9**	**0**	**6**	**0**	**309**	**6**	**10**	**526**	**0**	**866**	
7:45 AM	**0**	**0**	**0**	**3**	**0**	**4**	**0**	**325**	**10**	**10**	**500**	**0**	**852**	**3,439**
8:00 AM	0	0	0	0	0	9	0	312	9	10	482	0	822	3,393
8:15 AM	0	0	0	1	0	5	0	346	3	7	496	0	858	3,398
8:30 AM	0	0	0	3	0	4	0	312	3	8	504	0	834	3,366
8:45 AM	0	0	0	0	0	9	0	252	7	12	491	0	771	3,285
Count Total	0	0	0	25	0	44	0	2,399	43	69	4,144	0	6,724	
Peak Hr	**0**	**0**	**0**	**21**	**0**	**17**	**0**	**1,177**	**21**	**32**	**2,171**	**0**	**3,439**	

Note: Two-hour count summary volumes include heavy vehicles but exclude bicycles in overall count.

Interval Start	Heavy Vehicle Totals					Bicycles					Pedestrians (Crossing Leg)				
	EB	WB	NB	SB	Total	EB	WB	NB	SB	Total	East	West	North	South	Total
7:00 AM	**0**	**0**	**10**	**15**	***25***	**0**	**0**	**1**	**0**	***1***	**1**	**0**	**6**	**0**	***7***
7:15 AM	**0**	**1**	**8**	**19**	***28***	**0**	**0**	**2**	**0**	***2***	**2**	**0**	**5**	**0**	***7***
7:30 AM	**0**	**0**	**11**	**11**	***22***	**0**	**0**	**2**	**0**	***2***	**5**	**0**	**6**	**0**	***11***
7:45 AM	**0**	**0**	**12**	**19**	***31***	**0**	**0**	**5**	**1**	***6***	**2**	**0**	**4**	**0**	***6***
8:00 AM	0	0	6	20	*26*	0	0	2	0	*2*	0	0	4	0	*4*
8:15 AM	0	1	10	7	*18*	0	0	0	0	*0*	2	0	4	0	*6*
8:30 AM	0	0	7	14	*21*	0	0	0	0	*0*	6	0	5	0	*11*
8:45 AM	0	0	13	9	*22*	0	0	0	0	*0*	0	0	5	0	*5*
Count Total	0	2	77	114	*193*	0	0	12	1	*13*	18	0	39	0	*57*
Peak Hr	**0**	**1**	**41**	**64**	***106***	**0**	**0**	**10**	**1**	***11***	**10**	**0**	**21**	**0**	***31***

Mark Skaggs: 425 - 250 - 0777 mark.skaggs@idaxdata.com

SR 522
NE 145TH ST

Date: Wed, Nov 06, 2013
Count Period: 7:00 AM to 9:00 AM
Peak Hour: 7:30 AM to 8:30 AM

N

Peak Hour

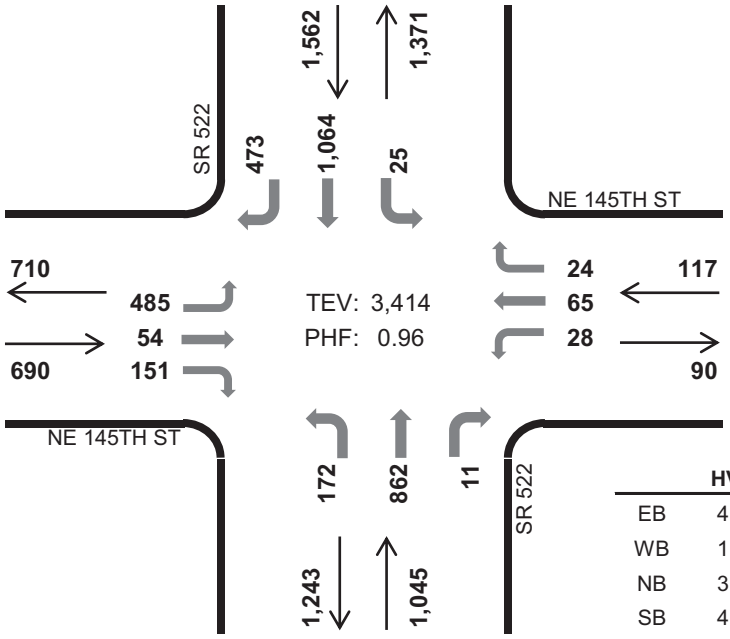

	HV %:	PHF
EB	4.9%	0.95
WB	1.7%	0.89
NB	3.7%	0.92
SB	4.2%	0.95
TOTAL	4.1%	0.96

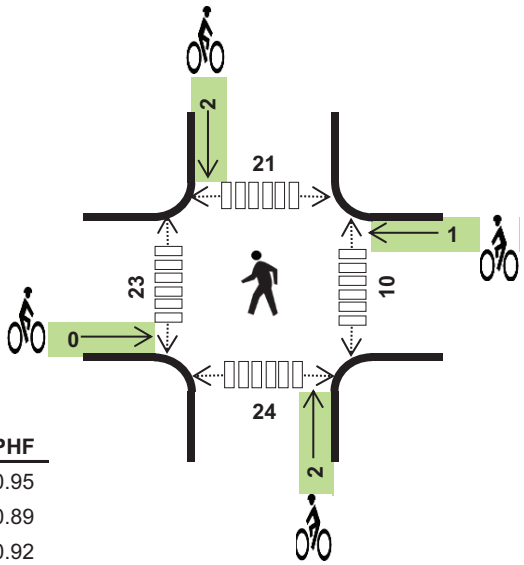

Two-Hour Count Summaries

Interval Start	NE 145TH ST Eastbound			NE 145TH ST Westbound			SR 522 Northbound			SR 522 Southbound			15-min Total	Rolling One Hour
	LT	TH	RT	LT	TH	RT	LT	TH	RT	LT	TH	RT		
7:00 AM	125	5	32	5	15	5	28	156	2	6	302	125	806	
7:15 AM	125	4	43	13	13	11	30	175	1	2	285	106	808	
7:30 AM	**113**	**14**	**37**	**10**	**19**	**4**	**38**	**216**	**0**	**3**	**272**	**118**	**844**	
7:45 AM	**131**	**9**	**42**	**7**	**15**	**5**	**36**	**196**	**4**	**5**	**275**	**104**	**829**	3,287
8:00 AM	**112**	**17**	**41**	**7**	**16**	**9**	**50**	**216**	**4**	**7**	**246**	**123**	**848**	3,329
8:15 AM	**129**	**14**	**31**	**4**	**15**	**6**	**48**	**234**	**3**	**10**	**271**	**128**	**893**	**3,414**
8:30 AM	133	8	34	18	18	3	36	199	3	8	237	117	814	3,384
8:45 AM	135	8	45	8	12	11	38	197	1	12	229	126	822	3,377
Count Total	1,003	79	305	72	123	54	304	1,589	18	53	2,117	947	6,664	
Peak Hr	**485**	**54**	**151**	**28**	**65**	**24**	**172**	**862**	**11**	**25**	**1,064**	**473**	**3,414**	

Note: Two-hour count summary volumes include heavy vehicles but exclude bicycles in overall count.

Interval Start	Heavy Vehicle Totals					Bicycles					Pedestrians (Crossing Leg)				
	EB	WB	NB	SB	Total	EB	WB	NB	SB	Total	East	West	North	South	Total
7:00 AM	8	1	4	12	*25*	0	0	2	0	*2*	0	1	1	5	*7*
7:15 AM	9	0	4	8	*21*	1	0	0	0	*1*	6	9	2	10	*27*
7:30 AM	**11**	**0**	**4**	**15**	***30***	**0**	**0**	**1**	**0**	***1***	**3**	**6**	**3**	**7**	***19***
7:45 AM	**9**	**2**	**7**	**10**	***28***	**0**	**1**	**0**	**0**	***1***	**2**	**10**	**10**	**4**	***26***
8:00 AM	**8**	**0**	**14**	**15**	***37***	**0**	**0**	**0**	**2**	***2***	**3**	**6**	**6**	**9**	***24***
8:15 AM	**6**	**0**	**14**	**26**	***46***	**0**	**0**	**1**	**0**	***1***	**2**	**1**	**2**	**4**	***9***
8:30 AM	8	0	9	24	*41*	1	2	0	1	*4*	3	6	3	6	*18*
8:45 AM	8	1	10	25	*44*	0	0	0	0	*0*	2	5	6	6	*19*
Count Total	67	4	66	135	*272*	2	3	4	3	*12*	21	44	33	51	*149*
Peak Hr	**34**	**2**	**39**	**66**	***141***	**0**	**1**	**2**	**2**	***5***	**10**	**23**	**21**	**24**	***78***

Mark Skaggs: 425 - 250 - 0777 mark.skaggs@idaxdata.com

SR 522
NE 153RD ST

Date: Tue, May 19, 2015
Count Period: 4:00 PM to 6:00 PM
Peak Hour: 4:15 PM to 5:15 PM

N

Peak Hour

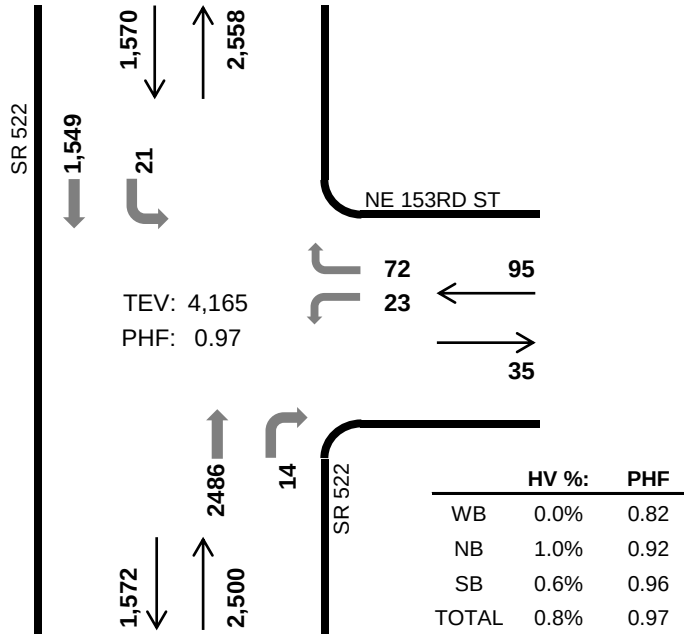

	HV %:	PHF
WB	0.0%	0.82
NB	1.0%	0.92
SB	0.6%	0.96
TOTAL	0.8%	0.97

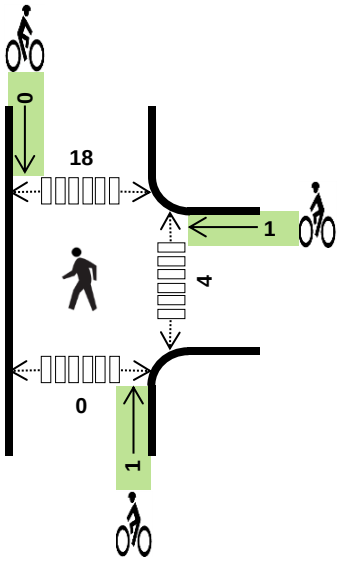

Two-Hour Count Summaries

Interval Start	NE 153RD ST Eastbound			NE 153RD ST Westbound			SR 522 Northbound			SR 522 Southbound			15-min Total	Rolling One Hour
	LT	TH	RT	LT	TH	RT	LT	TH	RT	LT	TH	RT		
4:00 PM	0	0	0	1	0	10	0	622	4	5	346	0	988	
4:15 PM	**0**	**0**	**0**	**4**	**0**	**25**	**0**	**571**	**5**	**6**	**381**	**0**	**992**	
4:30 PM	**0**	**0**	**0**	**8**	**0**	**13**	**0**	**677**	**2**	**5**	**372**	**0**	**1,077**	
4:45 PM	**0**	**0**	**0**	**4**	**0**	**16**	**0**	**618**	**5**	**3**	**404**	**0**	**1,050**	4,107
5:00 PM	**0**	**0**	**0**	**7**	**0**	**18**	**0**	**620**	**2**	**7**	**392**	**0**	**1,046**	**4,165**
5:15 PM	0	0	0	4	0	16	0	559	4	6	380	0	969	4,142
5:30 PM	0	0	0	2	0	23	0	598	4	6	399	0	1,032	4,097
5:45 PM	0	0	0	3	0	18	0	617	3	6	364	0	1,011	4,058
Count Total	0	0	0	33	0	139	0	4,882	29	44	3,038	0	8,165	
Peak Hr	**0**	**0**	**0**	**23**	**0**	**72**	**0**	**2,486**	**14**	**21**	**1,549**	**0**	**4,165**	

Note: Two-hour count summary volumes include heavy vehicles but exclude bicycles in overall count.

Interval Start	Heavy Vehicle Totals					Bicycles					Pedestrians (Crossing Leg)				
	EB	WB	NB	SB	Total	EB	WB	NB	SB	Total	East	West	North	South	Total
4:00 PM	0	0	12	1	*13*	0	0	0	0	*0*	1	0	2	0	*3*
4:15 PM	**0**	**0**	**5**	**3**	***8***	**0**	**0**	**0**	**0**	***0***	**1**	**0**	**7**	**0**	***8***
4:30 PM	**0**	**0**	**6**	**3**	***9***	**0**	**0**	**0**	**0**	***0***	**1**	**0**	**0**	**0**	***1***
4:45 PM	**0**	**0**	**4**	**2**	***6***	**0**	**1**	**0**	**0**	***1***	**1**	**0**	**2**	**0**	***3***
5:00 PM	**0**	**0**	**10**	**1**	***11***	**0**	**0**	**1**	**0**	***1***	**1**	**0**	**9**	**0**	***10***
5:15 PM	0	0	9	3	*12*	0	0	1	0	*1*	1	0	6	0	*7*
5:30 PM	0	0	4	3	*7*	0	0	2	0	*2*	4	0	3	0	*7*
5:45 PM	0	0	8	4	*12*	0	1	3	1	*5*	2	0	5	0	*7*
Count Total	0	0	58	20	*78*	0	2	7	1	*10*	12	0	34	0	*46*
Peak Hr	**0**	**0**	**25**	**9**	***34***	**0**	**1**	**1**	**0**	***2***	**4**	**0**	**18**	**0**	***22***

Mark Skaggs: 425 - 250 - 0777 mark.skaggs@idaxdata.com

SR 522/ NE 147th St
Tuesday May 19, 2015
4pm to 6pm

Count conducted for all side-street movements to/from NE 147th St

	WBRT	SBLT	NBRT	15min	Hr Vol
4:15	6	4	6	16	74
4:30	7	5	4	16	79
4:45	12	11	2	25	83
5:00	10	3	4	17	72
5:15	8	7	6	21	70
5:30	7	7	6	20	
5:45	7	4	3	14	
6:00	6	4	5	15	
Pk Hr Volume	37	28	18		

SR 522
NE 145TH ST

Date: Tue, May 19, 2015
Count Period: 4:00 PM to 6:00 PM
Peak Hour: 4:15 PM to 5:15 PM

N

Peak Hour

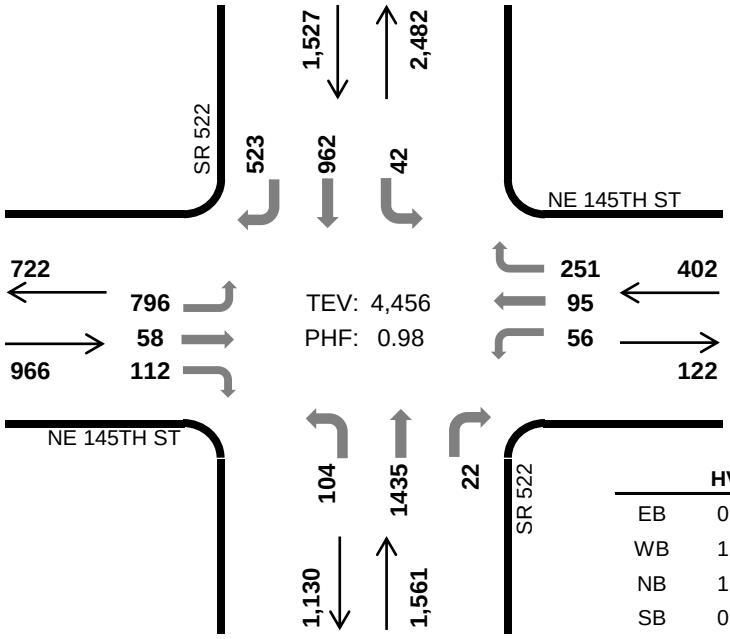

	HV %:	PHF
EB	0.6%	0.93
WB	1.2%	0.90
NB	1.5%	0.98
SB	0.9%	0.99
TOTAL	1.1%	0.98

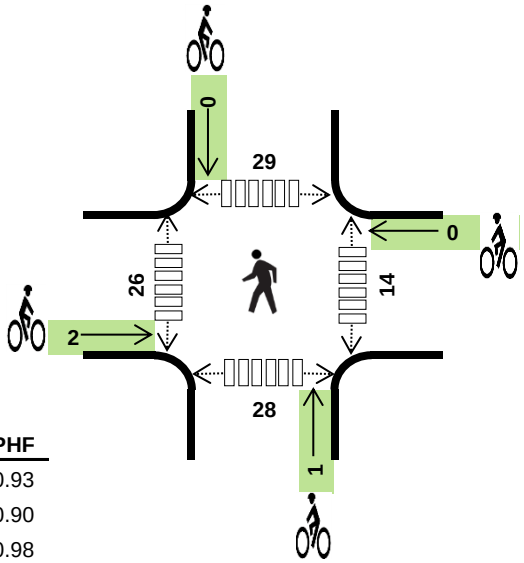

Two-Hour Count Summaries

Interval Start	NE 145TH ST Eastbound			NE 145TH ST Westbound			SR 522 Northbound			SR 522 Southbound			15-min Total	Rolling One Hour
	LT	TH	RT	LT	TH	RT	LT	TH	RT	LT	TH	RT		
4:00 PM	180	19	23	19	18	57	25	348	2	10	232	117	1,050	
4:15 PM	**218**	**14**	**29**	**8**	**21**	**68**	**28**	**355**	**9**	**5**	**227**	**150**	**1,132**	
4:30 PM	**195**	**11**	**19**	**16**	**31**	**65**	**25**	**365**	**2**	**14**	**242**	**122**	**1,107**	
4:45 PM	**182**	**17**	**28**	**16**	**17**	**62**	**24**	**351**	**2**	**16**	**251**	**115**	**1,081**	4,370
5:00 PM	**201**	**16**	**36**	**16**	**26**	**56**	**27**	**364**	**9**	**7**	**242**	**136**	**1,136**	**4,456**
5:15 PM	169	11	27	12	28	49	34	325	4	11	268	115	1,053	4,377
5:30 PM	178	12	15	16	27	54	23	377	6	14	263	153	1,138	4,408
5:45 PM	185	17	32	9	24	53	24	371	10	11	275	117	1,128	4,455
Count Total	1,508	117	209	112	192	464	210	2,856	44	88	2,000	1,025	8,825	
Peak Hr	**796**	**58**	**112**	**56**	**95**	**251**	**104**	**1,435**	**22**	**42**	**962**	**523**	**4,456**	

Note: Two-hour count summary volumes include heavy vehicles but exclude bicycles in overall count.

Interval Start	Heavy Vehicle Totals					Bicycles					Pedestrians (Crossing Leg)				
	EB	WB	NB	SB	Total	EB	WB	NB	SB	Total	East	West	North	South	Total
4:00 PM	2	0	6	0	*8*	0	0	0	1	*1*	1	4	11	10	*26*
4:15 PM	**1**	**0**	**7**	**4**	***12***	**0**	**0**	**0**	**0**	***0***	**5**	**7**	**0**	**10**	***22***
4:30 PM	**2**	**0**	**6**	**4**	***12***	**2**	**0**	**0**	**0**	***2***	**2**	**1**	**1**	**9**	***13***
4:45 PM	**2**	**0**	**2**	**2**	***6***	**0**	**0**	**0**	**0**	***0***	**4**	**13**	**19**	**7**	***43***
5:00 PM	**1**	**5**	**8**	**3**	***17***	**0**	**0**	**1**	**0**	***1***	**3**	**5**	**9**	**2**	***19***
5:15 PM	3	0	11	2	*16*	0	1	0	0	*1*	0	4	14	11	*29*
5:30 PM	2	0	4	5	*11*	0	0	1	1	*2*	6	1	3	14	*24*
5:45 PM	1	0	11	4	*16*	0	1	3	2	*6*	3	3	22	16	*44*
Count Total	14	5	55	24	*98*	2	2	5	4	*13*	24	38	79	79	*220*
Peak Hr	**6**	**5**	**23**	**13**	***47***	**2**	**0**	**1**	**0**	***3***	**14**	**26**	**29**	**28**	***97***

Mark Skaggs: 425 - 250 - 0777 mark.skaggs@idaxdata.com

ATTACHMENT 2

AM and PM Peak Hour Turn Movements
(Existing 2015, 2017 Background, and 2017 with Project Conditions)

LAKE FOREST CONDOS
AM PEAK HOUR TURN MOVEMENTS

1 SR 522 / NE 153rd St

	Existing 2015 AM PK	Future Growth [a]	SGV Traffic PM	2017 Background Traffic	Project [b] Trips	2017 with Project AM PK
EBLT	0	0	0	0	0	0
EBT	0	0	0	0	0	0
EBRT	0	0	0	0	0	0
WBLT	21	1	0	22	0	22
WBT	0	0	0	0	0	0
WBRT	17	1	0	18	0	18
NBUT	24	0	0	24	0	24
NBLT	0	0	0	0	0	0
NBT	1177	24	6	1207	2	1209
NBRT	21	1	0	22	0	22
SBUT	12	0	0	12	0	12
SBLT	32	1	0	33	0	33
SBT	2171	44	4	2219	0	2219
SBRT	0		0	0	0	0
	3475	72	10	3556	2	3558

Existing 2015 AM PK

2203	1194
0	38
0	53
2192	1198

2017 Background Traffic

2252	1224
0	40
0	55
2241	1229

2017 with Project AM PK

2252	1226
0	40
0	55
2241	1231

PHF=0.99

[a] annual growth estimate is 0.5% per year for SR 522 and NE 145th St west leg; 1.0%/yr for east leg

[b] 16 condo units (14727 35th Ave NE)

3 SR 522 / NE 145th St

	2015 AM PK	Future Growth [a]	SGV Traffic PM	2017 Background Traffic	Project [b] Trips	2017 with Project AM PK
EBLT	440	4	0	444	1	445
EBT	55	1	11	66	0	66
EBRT	153	2	0	154	0	154
WBLT	29	1	8	37	2	39
WBT	66	1	8	76	2	78
WBRT	24	0	6	31	0	31
NBUT	0	0	0	0	0	0
NBLT	174	2	0	175	0	175
NBT	821	8	0	829	0	829
NBRT	11	0	6	17	0	17
SBUT	0	0	0	0	0	0
SBLT	26	0	4	30	0	30
SBT	1425	14	0	1439	0	1439
SBRT	628	6	0	634	0	634
	3850	40	43	3933	5	3938

2015 AM PK

2078	1285
868	119
647	91
1606	1006

2017 Background Traffic

2103	1304
885	144
664	113
1630	1022

2017 with Project AM PK

2103	1305
887	148
665	113
1632	1022

PHF=0.96

[a] annual growth estimate is 0.5% per year for SR 522 and NE 145th St west leg; 1.0%/yr for east leg

[b] 16 condo units (14727 35th Ave NE)

LAKE FOREST CONDOS
PM PEAK HOUR TURN MOVEMENTS

1 SR 522 / NE 153rd St

	Existing 2015 PM PK	Future Growth [a]	SGV Traffic PM	2017 Background Traffic	Project [b] Trips	2017 with Project PM PK
EBLT	0	0	0	0	0	0
EBT	0	0	0	0	0	0
EBRT	0	0	0	0	0	0
WBLT	23	0	0	23	0	23
WBT	0	0	0	0	0	0
WBRT	72	1	0	73	0	73
NBUT	4	0	0	4	0	4
NBLT	0	0	0	0	0	0
NBT	2486	25	6	2517	1	2518
NBRT	14	0	0	14	0	14
SBUT	14	0	0	14	0	14
SBLT	21	0	0	21	0	21
SBT	1549	16	8	1573	1	1574
SBRT	0	0	0	0	0	0
	4183	43	14	4240	2	4242
					0.05%	

phf=0.97

[a] annual growth estimate is 0.5% per year for SR 522 and NE 145th St west leg; 1.0%/yr for east leg

[b] 16 condo units (14727 35th Ave NE)

Existing 2015 PM PK

1570	2558
0	95
0	35
1572	2500

2017 Background Traffic

1594	2590
0	97
0	36
1596	2531

2017 with Project PM PK

1595	2591
0	97
0	36
1597	2532

2 SR 522 / NE 147th St

	Existing 2015 PM PK	Future Growth [a]	SGV Traffic PM	2017 Background Traffic	Project [b] Trips	2017 with Project PM PK
EBLT	0	0	0	0	0	0
EBT	0	0	0	0	0	0
EBRT	0	0	0	0	0	0
WBLT	0	0	0	0	0	0
WBT	0	0	0	0	0	0
WBRT	37	1	0	38	1	39
NBUT	0	0	0	0	0	0
NBLT	0	0	0	0	0	0
NBT	2491	25	6	2522	0	2522
NBRT	18	0	0	18	4	22
SBUT	4	0	0	4	0	4
SBLT	24	0	0	24	1	25
SBT	1550	16	8	1573	0	1573
SBRT	0	0	0	0	0	0
	4124	42	14	4180	6	4186
					0.23%	2613

PHF=0.97

[a] annual growth estimate is 0.5% per year for SR 522 and NE 145th St west leg; 1.0%/yr for east leg

[b] 16 condo units (14727 35th Ave NE)

Existing 2015 PM PK

1574	2528
0	37
0	42
1550	2509

2017 Background Traffic

1598	2560
0	38
0	43
1573	2540

2017 with Project PM PK

1599	2561
0	39
0	48
1573	2544

LAKE FOREST CONDOS
PM PEAK HOUR TURN MOVEMENTS

3 SR 522 / NE 145th St

	Existing 2015 PM PK	Future Growth [a]	SGV Traffic PM	2017 Background Traffic	Project [b] Trips	2017 with Project PM PK
EBLT	796	8	0	804	2	806
EBT	58	1	20	79	0	79
EBRT	112	1	0	113	0	113
WBLT	56	1	9	66	1	67
WBT	95	2	15	112	1	113
WBRT	251	5	6	262	0	262
NBUT	0	0	0	0	0	0
NBLT	104	1	0	105	0	105
NBT	1435	14	0	1449	2	1451
NBRT	22	0	12	34	0	34
SBUT	0	0	0	0	0	0
SBLT	42	1	8	51	0	51
SBT	962	10	0	972	0	972
SBRT	523	5	0	528	0	528
	4456	50	70	4576	6	4582
					0.13%	

phf=0.98

[a] annual growth estimate is 0.5% per year for SR 522 and NE 145th St west leg; 1.0%/yr for east leg

[b] 16 condo units (14727 35th Ave NE)

Existing 2015 PM PK

1527	2482
722	402
966	122
1130	1561

2017 Background Traffic

1551	2515
745	440
996	164
1151	1589

2017 with Project PM PK

1551	2519
746	442
998	164
1152	1591

ATTACHMENT 3

AM and PM Peak Hour Level of Service Results

Movement	WBL	WBR	NBU	NBT	NBR	SBU	SBL	SBT
Lane Configurations								
Ideal Flow (vphpl)	1900	1900	1900	1900	1900	1900	1900	1900
Total Lost time (s)	4.0		4.0	4.0	4.0		4.0	4.0
Lane Util. Factor	1.00		1.00	0.95	1.00		1.00	0.95
Frpb, ped/bikes	0.97		1.00	1.00	0.93		1.00	1.00
Flpb, ped/bikes	1.00		1.00	1.00	1.00		1.00	1.00
Frt	0.94		1.00	1.00	0.85		1.00	1.00
Flt Protected	0.97		0.95	1.00	1.00		0.95	1.00
Satd. Flow (prot)	1631		1787	3505	1460		1760	3505
Flt Permitted	0.97		0.95	1.00	1.00		0.95	1.00
Satd. Flow (perm)	1631		1787	3505	1460		1760	3505
Volume (vph)	21	17	24	1177	21	12	32	2171
Peak-hour factor, PHF	0.80	0.80	0.99	0.99	0.80	0.99	0.80	0.99
Adj. Flow (vph)	26	21	24	1189	26	12	40	2193
RTOR Reduction (vph)	18	0	0	0	2	0	0	0
Lane Group Flow (vph)	29	0	24	1189	24	0	52	2193
Confl. Peds. (#/hr)		21			10			
Heavy Vehicles (%)	3%	3%	1%	3%	3%	1%	3%	3%
Turn Type			Prot		Perm	Prot	Prot	
Protected Phases	8		5	2		1	1	6
Permitted Phases					2			
Actuated Green, G (s)	7.2		5.0	131.6	131.6		8.6	135.2
Effective Green, g (s)	7.2		5.0	131.6	131.6		8.6	135.2
Actuated g/C Ratio	0.05		0.03	0.83	0.83		0.05	0.85
Clearance Time (s)	4.0		4.0	4.0	4.0		4.0	4.0
Vehicle Extension (s)	3.0		3.0	3.0	3.0		3.0	3.0
Lane Grp Cap (vph)	74		56	2894	1205		95	2973
v/s Ratio Prot	c0.03		0.01	0.34			c0.03	c0.63
v/s Ratio Perm					0.02			
v/c Ratio	0.39		0.43	0.41	0.02		0.55	0.74
Uniform Delay, d1	74.0		75.8	3.7	2.5		73.5	4.9
Progression Factor	1.00		1.00	1.00	1.00		1.00	1.00
Incremental Delay, d2	3.4		5.2	0.4	0.0		6.3	1.7
Delay (s)	77.3		81.0	4.1	2.5		79.8	6.6
Level of Service	E		F	A	A		E	A
Approach Delay (s)	77.3			5.6				8.3
Approach LOS	E			A				A

Intersection Summary			
HCM Average Control Delay	8.2	HCM Level of Service	A
HCM Volume to Capacity ratio	0.73		
Actuated Cycle Length (s)	159.4	Sum of lost time (s)	12.0
Intersection Capacity Utilization	75.0%	ICU Level of Service	D
Analysis Period (min)	15		
c Critical Lane Group			

Movement	EBL	EBT	EBR	WBL	WBT	WBR	NBL	NBT	NBR	SBL	SBT	SBR
Lane Configurations												
Ideal Flow (vphpl)	1900	1900	1900	1900	1900	1900	1900	1900	1900	1900	1900	1900
Total Lost time (s)	4.0	4.0	4.0	4.0	4.0	4.0	4.0	4.0	4.0	4.0	4.0	4.0
Lane Util. Factor	0.95	0.95	1.00	1.00	1.00	1.00	1.00	0.95	1.00	1.00	0.95	1.00
Frpb, ped/bikes	1.00	1.00	0.91	1.00	1.00	0.92	1.00	1.00	0.93	1.00	1.00	0.86
Flpb, ped/bikes	1.00	1.00	1.00	1.00	1.00	1.00	1.00	1.00	1.00	1.00	1.00	1.00
Frt	1.00	1.00	0.85	1.00	1.00	0.85	1.00	1.00	0.85	1.00	1.00	0.85
Flt Protected	0.95	0.96	1.00	0.95	1.00	1.00	0.95	1.00	1.00	0.95	1.00	1.00
Satd. Flow (prot)	1633	1654	1406	1770	1863	1462	1736	3471	1442	1736	3471	1339
Flt Permitted	0.95	0.96	1.00	0.95	1.00	1.00	0.95	1.00	1.00	0.95	1.00	1.00
Satd. Flow (perm)	1633	1654	1406	1770	1863	1462	1736	3471	1442	1736	3471	1339
Volume (vph)	440	55	153	29	66	24	174	821	11	26	1425	528
Peak-hour factor, PHF	0.96	0.96	0.96	0.96	0.96	0.96	0.96	0.96	0.96	0.96	0.96	0.96
Adj. Flow (vph)	458	57	159	30	69	25	181	855	11	27	1484	550
RTOR Reduction (vph)	0	0	126	0	0	24	0	0	2	0	0	212
Lane Group Flow (vph)	251	264	33	30	69	1	181	855	9	27	1484	338
Confl. Peds. (#/hr)			24			21			10			23
Heavy Vehicles (%)	5%	5%	5%	2%	2%	2%	4%	4%	4%	4%	4%	4%
Turn Type	Split		Perm	Split		Perm	Prot		Perm	Prot		Perm
Protected Phases	4	4		8	8		5	2		1	6	
Permitted Phases			4			8			2			6
Actuated Green, G (s)	29.9	29.9	29.9	9.7	9.7	9.7	20.8	107.5	107.5	3.9	90.6	90.6
Effective Green, g (s)	29.9	29.9	29.9	9.7	9.7	9.7	20.8	107.5	107.5	3.9	90.6	90.6
Actuated g/C Ratio	0.18	0.18	0.18	0.06	0.06	0.06	0.12	0.64	0.64	0.02	0.54	0.54
Clearance Time (s)	4.0	4.0	4.0	4.0	4.0	4.0	4.0	4.0	4.0	4.0	4.0	4.0
Vehicle Extension (s)	3.0	3.0	3.0	3.0	3.0	3.0	3.0	3.0	3.0	3.0	3.0	3.0
Lane Grp Cap (vph)	292	296	252	103	108	85	216	2234	928	41	1883	726
v/s Ratio Prot	0.15	c0.16		0.02	c0.04		c0.10	0.25		0.02	c0.43	
v/s Ratio Perm			0.11			0.02			0.01			0.41
v/c Ratio	0.86	0.89	0.13	0.29	0.64	0.02	0.84	0.38	0.01	0.66	0.79	0.47
Uniform Delay, d1	66.5	67.0	57.6	75.4	76.9	74.2	71.5	14.1	10.7	80.9	30.5	23.4
Progression Factor	1.00	1.00	1.00	1.00	1.00	1.00	1.00	1.00	1.00	1.00	1.00	1.00
Incremental Delay, d2	21.4	26.7	0.2	1.6	11.8	0.1	23.7	0.5	0.0	32.2	3.4	2.1
Delay (s)	87.9	93.7	57.8	76.9	88.7	74.2	95.1	14.6	10.7	113.1	34.0	25.5
Level of Service	F	F	E	E	F	E	F	B	B	F	C	C
Approach Delay (s)		83.1			82.9			28.5			32.7	
Approach LOS		F			F			C			C	

Intersection Summary			
HCM Average Control Delay	41.9	HCM Level of Service	D
HCM Volume to Capacity ratio	0.81		
Actuated Cycle Length (s)	167.0	Sum of lost time (s)	16.0
Intersection Capacity Utilization	79.3%	ICU Level of Service	D
Analysis Period (min)	15		
c Critical Lane Group			

Movement	WBL	WBR	NBU	NBT	NBR	SBU	SBL	SBT
Lane Configurations								
Ideal Flow (vphpl)	1900	1900	1900	1900	1900	1900	1900	1900
Total Lost time (s)	4.0		4.0	4.0	4.0		4.0	4.0
Lane Util. Factor	1.00		1.00	0.95	1.00		1.00	0.95
Frpb, ped/bikes	0.97		1.00	1.00	0.93		1.00	1.00
Flpb, ped/bikes	1.00		1.00	1.00	1.00		1.00	1.00
Frt	0.94		1.00	1.00	0.85		1.00	1.00
Flt Protected	0.97		0.95	1.00	1.00		0.95	1.00
Satd. Flow (prot)	1633		1787	3505	1459		1760	3505
Flt Permitted	0.97		0.95	1.00	1.00		0.95	1.00
Satd. Flow (perm)	1633		1787	3505	1459		1760	3505
Volume (vph)	22	18	24	1207	22	12	33	2219
Peak-hour factor, PHF	0.80	0.80	0.99	0.99	0.80	0.99	0.80	0.99
Adj. Flow (vph)	28	22	24	1219	28	12	41	2241
RTOR Reduction (vph)	17	0	0	0	2	0	0	0
Lane Group Flow (vph)	33	0	24	1219	26	0	53	2241
Confl. Peds. (#/hr)		21			10			
Heavy Vehicles (%)	3%	3%	1%	3%	3%	1%	3%	3%
Turn Type			Prot		Perm	Prot	Prot	
Protected Phases	8		5	2		1	1	6
Permitted Phases					2			
Actuated Green, G (s)	7.5		4.8	133.3	133.3		8.7	137.2
Effective Green, g (s)	7.5		4.8	133.3	133.3		8.7	137.2
Actuated g/C Ratio	0.05		0.03	0.83	0.83		0.05	0.85
Clearance Time (s)	4.0		4.0	4.0	4.0		4.0	4.0
Vehicle Extension (s)	3.0		3.0	3.0	3.0		3.0	3.0
Lane Grp Cap (vph)	76		53	2893	1204		95	2978
v/s Ratio Prot	c0.03		0.01	0.35			c0.03	c0.64
v/s Ratio Perm					0.02			
v/c Ratio	0.43		0.45	0.42	0.02		0.56	0.75
Uniform Delay, d1	74.9		77.1	3.8	2.5		74.5	5.1
Progression Factor	1.00		1.00	1.00	1.00		1.00	1.00
Incremental Delay, d2	3.9		6.0	0.5	0.0		6.9	1.8
Delay (s)	78.8		83.1	4.2	2.5		81.5	6.9
Level of Service	E		F	A	A		F	A
Approach Delay (s)	78.8			5.7				8.6
Approach LOS	E			A				A

Intersection Summary			
HCM Average Control Delay	8.5	HCM Level of Service	A
HCM Volume to Capacity ratio	0.75		
Actuated Cycle Length (s)	161.5	Sum of lost time (s)	12.0
Intersection Capacity Utilization	76.4%	ICU Level of Service	D
Analysis Period (min)	15		
c Critical Lane Group			

Movement	EBL	EBT	EBR	WBL	WBT	WBR	NBL	NBT	NBR	SBL	SBT	SBR
Lane Configurations												
Ideal Flow (vphpl)	1900	1900	1900	1900	1900	1900	1900	1900	1900	1900	1900	1900
Total Lost time (s)	4.0	4.0	4.0	4.0	4.0	4.0	4.0	4.0	4.0	4.0	4.0	4.0
Lane Util. Factor	0.95	0.95	1.00	1.00	1.00	1.00	1.00	0.95	1.00	1.00	0.95	1.00
Frpb, ped/bikes	1.00	1.00	0.91	1.00	1.00	0.92	1.00	1.00	0.93	1.00	1.00	0.86
Flpb, ped/bikes	1.00	1.00	1.00	1.00	1.00	1.00	1.00	1.00	1.00	1.00	1.00	1.00
Frt	1.00	1.00	0.85	1.00	1.00	0.85	1.00	1.00	0.85	1.00	1.00	0.85
Flt Protected	0.95	0.96	1.00	0.95	1.00	1.00	0.95	1.00	1.00	0.95	1.00	1.00
Satd. Flow (prot)	1633	1657	1405	1770	1863	1461	1736	3471	1441	1736	3471	1336
Flt Permitted	0.95	0.96	1.00	0.95	1.00	1.00	0.95	1.00	1.00	0.95	1.00	1.00
Satd. Flow (perm)	1633	1657	1405	1770	1863	1461	1736	3471	1441	1736	3471	1336
Volume (vph)	444	66	154	37	76	31	175	829	17	30	1439	634
Peak-hour factor, PHF	0.96	0.96	0.96	0.96	0.96	0.96	0.96	0.96	0.96	0.96	0.96	0.96
Adj. Flow (vph)	462	69	160	39	79	32	182	864	18	31	1499	660
RTOR Reduction (vph)	0	0	123	0	0	30	0	0	4	0	0	261
Lane Group Flow (vph)	259	272	37	39	79	2	182	864	14	31	1499	399
Confl. Peds. (#/hr)			24			21			10			23
Heavy Vehicles (%)	5%	5%	5%	2%	2%	2%	4%	4%	4%	4%	4%	4%
Turn Type	Split		Perm	Split		Perm	Prot		Perm	Prot		Perm
Protected Phases	4	4		8	8		5	2		1	6	
Permitted Phases			4			8			2			6
Actuated Green, G (s)	31.4	31.4	31.4	12.1	12.1	12.1	21.1	104.2	104.2	6.0	89.1	89.1
Effective Green, g (s)	31.4	31.4	31.4	12.1	12.1	12.1	21.1	104.2	104.2	6.0	89.1	89.1
Actuated g/C Ratio	0.19	0.19	0.19	0.07	0.07	0.07	0.12	0.61	0.61	0.04	0.53	0.53
Clearance Time (s)	4.0	4.0	4.0	4.0	4.0	4.0	4.0	4.0	4.0	4.0	4.0	4.0
Vehicle Extension (s)	3.0	3.0	3.0	3.0	3.0	3.0	3.0	3.0	3.0	3.0	3.0	3.0
Lane Grp Cap (vph)	302	307	260	126	133	104	216	2131	885	61	1822	701
v/s Ratio Prot	0.16	c0.16		0.02	c0.04		c0.10	0.25		0.02	0.43	
v/s Ratio Perm			0.11			0.02			0.01			0.49
v/c Ratio	0.86	0.89	0.14	0.31	0.59	0.02	0.84	0.41	0.02	0.51	0.82	0.57
Uniform Delay, d1	67.0	67.4	57.9	74.8	76.4	73.3	72.7	16.8	12.8	80.4	33.7	27.3
Progression Factor	1.00	1.00	1.00	1.00	1.00	1.00	1.00	1.00	1.00	1.00	1.00	1.00
Incremental Delay, d2	20.6	24.8	0.3	1.4	6.9	0.1	24.6	0.6	0.0	6.5	4.3	3.3
Delay (s)	87.6	92.2	58.1	76.2	83.4	73.4	97.3	17.4	12.8	86.9	38.0	30.6
Level of Service	F	F	E	E	F	E	F	B	B	F	D	C
Approach Delay (s)		82.6			79.4			31.0			36.5	
Approach LOS		F			E			C			D	

Intersection Summary			
HCM Average Control Delay	44.4	HCM Level of Service	D
HCM Volume to Capacity ratio	0.89		
Actuated Cycle Length (s)	169.7	Sum of lost time (s)	16.0
Intersection Capacity Utilization	80.2%	ICU Level of Service	D
Analysis Period (min)	15		
c Critical Lane Group			

Movement	WBL	WBR	NBU	NBT	NBR	SBU	SBL	SBT
Lane Configurations								
Ideal Flow (vphpl)	1900	1900	1900	1900	1900	1900	1900	1900
Total Lost time (s)	4.0		4.0	4.0	4.0		4.0	4.0
Lane Util. Factor	1.00		1.00	0.95	1.00		1.00	0.95
Frpb, ped/bikes	0.97		1.00	1.00	0.93		1.00	1.00
Flpb, ped/bikes	1.00		1.00	1.00	1.00		1.00	1.00
Frt	0.94		1.00	1.00	0.85		1.00	1.00
Flt Protected	0.97		0.95	1.00	1.00		0.95	1.00
Satd. Flow (prot)	1633		1787	3505	1459		1760	3505
Flt Permitted	0.97		0.95	1.00	1.00		0.95	1.00
Satd. Flow (perm)	1633		1787	3505	1459		1760	3505
Volume (vph)	22	18	24	1209	22	12	33	2219
Peak-hour factor, PHF	0.80	0.80	0.99	0.99	0.80	0.99	0.80	0.99
Adj. Flow (vph)	28	22	24	1221	28	12	41	2241
RTOR Reduction (vph)	17	0	0	0	2	0	0	0
Lane Group Flow (vph)	33	0	24	1221	26	0	53	2241
Confl. Peds. (#/hr)		21			10			
Heavy Vehicles (%)	3%	3%	1%	3%	3%	1%	3%	3%
Turn Type			Prot		Perm	Prot	Prot	
Protected Phases	8		5	2		1	1	6
Permitted Phases					2			
Actuated Green, G (s)	7.5		4.8	133.3	133.3		8.7	137.2
Effective Green, g (s)	7.5		4.8	133.3	133.3		8.7	137.2
Actuated g/C Ratio	0.05		0.03	0.83	0.83		0.05	0.85
Clearance Time (s)	4.0		4.0	4.0	4.0		4.0	4.0
Vehicle Extension (s)	3.0		3.0	3.0	3.0		3.0	3.0
Lane Grp Cap (vph)	76		53	2893	1204		95	2978
v/s Ratio Prot	c0.03		0.01	0.35			c0.03	c0.64
v/s Ratio Perm					0.02			
v/c Ratio	0.43		0.45	0.42	0.02		0.56	0.75
Uniform Delay, d1	74.9		77.1	3.8	2.5		74.5	5.1
Progression Factor	1.00		1.00	1.00	1.00		1.00	1.00
Incremental Delay, d2	3.9		6.0	0.5	0.0		6.9	1.8
Delay (s)	78.8		83.1	4.2	2.5		81.5	6.9
Level of Service	E		F	A	A		F	A
Approach Delay (s)	78.8			5.7				8.6
Approach LOS	E			A				A

Intersection Summary			
HCM Average Control Delay	8.5	HCM Level of Service	A
HCM Volume to Capacity ratio	0.75		
Actuated Cycle Length (s)	161.5	Sum of lost time (s)	12.0
Intersection Capacity Utilization	76.4%	ICU Level of Service	D
Analysis Period (min)	15		
c Critical Lane Group			

HCM Signalized Intersection Capacity Analysis
3: NE 145th St & SR 522

5/21/2015

Movement	EBL	EBT	EBR	WBL	WBT	WBR	NBL	NBT	NBR	SBL	SBT	SBR
Lane Configurations												
Ideal Flow (vphpl)	1900	1900	1900	1900	1900	1900	1900	1900	1900	1900	1900	1900
Total Lost time (s)	4.0	4.0	4.0	4.0	4.0	4.0	4.0	4.0	4.0	4.0	4.0	4.0
Lane Util. Factor	0.95	0.95	1.00	1.00	1.00	1.00	1.00	0.95	1.00	1.00	0.95	1.00
Frpb, ped/bikes	1.00	1.00	0.91	1.00	1.00	0.92	1.00	1.00	0.93	1.00	1.00	0.86
Flpb, ped/bikes	1.00	1.00	1.00	1.00	1.00	1.00	1.00	1.00	1.00	1.00	1.00	1.00
Frt	1.00	1.00	0.85	1.00	1.00	0.85	1.00	1.00	0.85	1.00	1.00	0.85
Flt Protected	0.95	0.96	1.00	0.95	1.00	1.00	0.95	1.00	1.00	0.95	1.00	1.00
Satd. Flow (prot)	1633	1657	1404	1770	1863	1461	1736	3471	1441	1736	3471	1336
Flt Permitted	0.95	0.96	1.00	0.95	1.00	1.00	0.95	1.00	1.00	0.95	1.00	1.00
Satd. Flow (perm)	1633	1657	1404	1770	1863	1461	1736	3471	1441	1736	3471	1336
Volume (vph)	445	66	154	39	78	31	175	829	17	30	1439	634
Peak-hour factor, PHF	0.96	0.96	0.96	0.96	0.96	0.96	0.96	0.96	0.96	0.96	0.96	0.96
Adj. Flow (vph)	464	69	160	41	81	32	182	864	18	31	1499	660
RTOR Reduction (vph)	0	0	122	0	0	30	0	0	4	0	0	262
Lane Group Flow (vph)	260	273	38	41	81	2	182	864	14	31	1499	398
Confl. Peds. (#/hr)			24			21			10			23
Heavy Vehicles (%)	5%	5%	5%	2%	2%	2%	4%	4%	4%	4%	4%	4%
Turn Type	Split		Perm	Split		Perm	Prot		Perm	Prot		Perm
Protected Phases	4	4		8	8		5	2		1	6	
Permitted Phases			4			8			2			6
Actuated Green, G (s)	31.5	31.5	31.5	12.2	12.2	12.2	21.1	104.2	104.2	6.0	89.1	89.1
Effective Green, g (s)	31.5	31.5	31.5	12.2	12.2	12.2	21.1	104.2	104.2	6.0	89.1	89.1
Actuated g/C Ratio	0.19	0.19	0.19	0.07	0.07	0.07	0.12	0.61	0.61	0.04	0.52	0.52
Clearance Time (s)	4.0	4.0	4.0	4.0	4.0	4.0	4.0	4.0	4.0	4.0	4.0	4.0
Vehicle Extension (s)	3.0	3.0	3.0	3.0	3.0	3.0	3.0	3.0	3.0	3.0	3.0	3.0
Lane Grp Cap (vph)	303	307	260	127	134	105	216	2129	884	61	1820	701
v/s Ratio Prot	0.16	c0.16		0.02	c0.04		c0.10	0.25		0.02	0.43	
v/s Ratio Perm			0.11			0.02			0.01			0.49
v/c Ratio	0.86	0.89	0.15	0.32	0.60	0.02	0.84	0.41	0.02	0.51	0.82	0.57
Uniform Delay, d1	67.0	67.5	57.9	74.9	76.5	73.3	72.8	16.9	12.8	80.5	33.8	27.4
Progression Factor	1.00	1.00	1.00	1.00	1.00	1.00	1.00	1.00	1.00	1.00	1.00	1.00
Incremental Delay, d2	20.6	25.2	0.3	1.5	7.5	0.1	24.6	0.6	0.0	6.5	4.4	3.3
Delay (s)	87.7	92.7	58.2	76.4	84.0	73.4	97.4	17.5	12.9	87.0	38.2	30.7
Level of Service	F	F	E	E	F	E	F	B	B	F	D	C
Approach Delay (s)		82.9			79.8			31.1			36.6	
Approach LOS		F			E			C			D	

Intersection Summary			
HCM Average Control Delay	44.6	HCM Level of Service	D
HCM Volume to Capacity ratio	0.89		
Actuated Cycle Length (s)	169.9	Sum of lost time (s)	16.0
Intersection Capacity Utilization	80.2%	ICU Level of Service	D
Analysis Period (min)	15		
c Critical Lane Group			

Movement	WBL	WBR	NBU	NBT	NBR	SBU	SBL	SBT
Lane Configurations								
Ideal Flow (vphpl)	1900	1900	1900	1900	1900	1900	1900	1900
Total Lost time (s)	4.0		4.0	4.0	4.0		4.0	4.0
Lane Util. Factor	1.00		1.00	0.95	1.00		1.00	0.95
Frpb, ped/bikes	0.95		1.00	1.00	0.96		1.00	1.00
Flpb, ped/bikes	1.00		1.00	1.00	1.00		1.00	1.00
Frt	0.90		1.00	1.00	0.85		1.00	1.00
Flt Protected	0.99		0.95	1.00	1.00		0.95	1.00
Satd. Flow (prot)	1609		1805	3574	1549		1805	3574
Flt Permitted	0.99		0.95	1.00	1.00		0.95	1.00
Satd. Flow (perm)	1609		1805	3574	1549		1805	3574
Volume (vph)	23	72	4	2486	14	14	21	1549
Peak-hour factor, PHF	0.80	1.00	1.00	0.97	0.80	0.80	0.80	0.97
Adj. Flow (vph)	29	72	4	2563	18	18	26	1597
RTOR Reduction (vph)	33	0	0	0	1	0	0	0
Lane Group Flow (vph)	68	0	4	2563	17	0	44	1597
Confl. Peds. (#/hr)		18			4			
Heavy Vehicles (%)	0%	0%	0%	1%	0%	0%	0%	1%
Turn Type			Prot		Perm	Prot	Prot	
Protected Phases	8		5	2		1	1	6
Permitted Phases					2			
Actuated Green, G (s)	12.3		1.1	142.9	142.9		5.5	147.3
Effective Green, g (s)	12.3		1.1	142.9	142.9		5.5	147.3
Actuated g/C Ratio	0.07		0.01	0.83	0.83		0.03	0.85
Clearance Time (s)	4.0		4.0	4.0	4.0		4.0	4.0
Vehicle Extension (s)	3.0		3.0	3.0	3.0		3.0	3.0
Lane Grp Cap (vph)	115		11	2957	1282		57	3048
v/s Ratio Prot	c0.06		0.00	c0.72			c0.02	0.45
v/s Ratio Perm					0.01			
v/c Ratio	0.59		0.36	0.87	0.01		0.77	0.52
Uniform Delay, d1	77.7		85.5	9.1	2.6		83.0	3.4
Progression Factor	1.00		1.00	1.00	1.00		1.00	1.00
Incremental Delay, d2	7.5		19.3	3.7	0.0		46.8	0.6
Delay (s)	85.2		104.7	12.8	2.6		129.8	4.0
Level of Service	F		F	B	A		F	A
Approach Delay (s)	85.2			12.9				7.4
Approach LOS	F			B				A

Intersection Summary			
HCM Average Control Delay	12.5	HCM Level of Service	B
HCM Volume to Capacity ratio	0.86		
Actuated Cycle Length (s)	172.7	Sum of lost time (s)	12.0
Intersection Capacity Utilization	85.3%	ICU Level of Service	E
Analysis Period (min)	15		
c Critical Lane Group			

Movement	WBL	WBR	NBT	NBR	SBL	SBT
Lane Configurations						
Sign Control	Stop		Free			Free
Grade	0%		0%			0%
Volume (veh/h)	0	37	2491	18	28	1550
Peak Hour Factor	0.25	0.80	0.97	0.80	0.80	0.97
Hourly flow rate (vph)	0	46	2568	22	35	1598
Pedestrians						
Lane Width (ft)						
Walking Speed (ft/s)						
Percent Blockage						
Right turn flare (veh)						
Median type	None					
Median storage veh)						
Upstream signal (ft)			700			
pX, platoon unblocked						
vC, conflicting volume	3448	1295			2591	
vC1, stage 1 conf vol						
vC2, stage 2 conf vol						
vCu, unblocked vol	3448	1295			2591	
tC, single (s)	6.8	6.9			4.1	
tC, 2 stage (s)						
tF (s)	3.5	3.3			2.2	
p0 queue free %	100	70			79	
cM capacity (veh/h)	4	156			171	

Direction, Lane #	WB 1	NB 1	NB 2	SB 1	SB 2	SB 3
Volume Total	46	1712	879	35	799	799
Volume Left	0	0	0	35	0	0
Volume Right	46	0	22	0	0	0
cSH	156	1700	1700	171	1700	1700
Volume to Capacity	0.30	1.01	0.52	0.21	0.47	0.47
Queue Length 95th (ft)	29	0	0	19	0	0
Control Delay (s)	37.6	0.0	0.0	31.5	0.0	0.0
Lane LOS	E			D		
Approach Delay (s)	37.6	0.0		0.7		
Approach LOS	E					

Intersection Summary			
Average Delay	0.7		
Intersection Capacity Utilization	79.4%	ICU Level of Service	D
Analysis Period (min)	15		

HCM Signalized Intersection Capacity Analysis
3: NE 145th St & SR 522

5/21/2015

Movement	EBL	EBT	EBR	WBL	WBT	WBR	NBL	NBT	NBR	SBL	SBT	SBR
Lane Configurations												
Ideal Flow (vphpl)	1900	1900	1900	1900	1900	1900	1900	1900	1900	1900	1900	1900
Total Lost time (s)	4.0	4.0	4.0	4.0	4.0	4.0	4.0	4.0	4.0	4.0	4.0	4.0
Lane Util. Factor	0.95	0.95	1.00	1.00	1.00	1.00	1.00	0.95	1.00	1.00	0.95	1.00
Frpb, ped/bikes	1.00	1.00	0.88	1.00	1.00	0.87	1.00	1.00	0.89	1.00	1.00	0.81
Flpb, ped/bikes	1.00	1.00	1.00	1.00	1.00	1.00	1.00	1.00	1.00	1.00	1.00	1.00
Frt	1.00	1.00	0.85	1.00	1.00	0.85	1.00	1.00	0.85	1.00	1.00	0.85
Flt Protected	0.95	0.96	1.00	0.95	1.00	1.00	0.95	1.00	1.00	0.95	1.00	1.00
Satd. Flow (prot)	1698	1713	1405	1787	1881	1399	1770	3539	1408	1787	3574	1297
Flt Permitted	0.95	0.96	1.00	0.95	1.00	1.00	0.95	1.00	1.00	0.95	1.00	1.00
Satd. Flow (perm)	1698	1713	1405	1787	1881	1399	1770	3539	1408	1787	3574	1297
Volume (vph)	796	58	112	56	95	251	104	1435	22	42	962	523
Peak-hour factor, PHF	0.98	0.98	0.98	0.98	0.98	0.98	0.98	0.98	0.98	0.98	0.98	0.98
Adj. Flow (vph)	812	59	114	57	97	256	106	1464	22	43	982	534
RTOR Reduction (vph)	0	0	44	0	0	52	0	0	3	0	0	270
Lane Group Flow (vph)	424	447	70	57	97	204	106	1464	19	43	982	264
Confl. Peds. (#/hr)			28			29			14			26
Heavy Vehicles (%)	1%	1%	1%	1%	1%	1%	2%	2%	2%	1%	1%	1%
Turn Type	Split		Perm	Split		Perm	Prot		Perm	Prot		Perm
Protected Phases	4	4		8	8		5	2		1	6	
Permitted Phases			4			8			2			6
Actuated Green, G (s)	58.3	58.3	58.3	33.4	33.4	33.4	17.3	97.4	97.4	7.0	87.1	87.1
Effective Green, g (s)	58.3	58.3	58.3	33.4	33.4	33.4	17.3	97.4	97.4	7.0	87.1	87.1
Actuated g/C Ratio	0.27	0.27	0.27	0.16	0.16	0.16	0.08	0.46	0.46	0.03	0.41	0.41
Clearance Time (s)	4.0	4.0	4.0	4.0	4.0	4.0	4.0	4.0	4.0	4.0	4.0	4.0
Vehicle Extension (s)	3.0	3.0	3.0	3.0	3.0	3.0	3.0	3.0	3.0	3.0	3.0	3.0
Lane Grp Cap (vph)	467	471	386	281	296	220	144	1625	647	59	1468	533
v/s Ratio Prot	0.25	c0.26		0.03	0.05		c0.06	c0.41		0.02	0.27	
v/s Ratio Perm			0.08			0.18			0.02			0.41
v/c Ratio	0.91	0.95	0.18	0.20	0.33	0.93	0.74	0.90	0.03	0.73	0.67	0.50
Uniform Delay, d1	74.3	75.4	58.7	77.8	79.4	88.1	95.2	52.9	31.4	101.6	50.8	46.2
Progression Factor	1.00	1.00	1.00	1.00	1.00	1.00	1.00	1.00	1.00	1.00	1.00	1.00
Incremental Delay, d2	21.1	28.6	0.2	0.4	0.7	40.4	17.7	8.5	0.1	36.0	2.4	3.3
Delay (s)	95.4	104.1	58.9	78.1	80.0	128.5	112.8	61.4	31.5	137.6	53.2	49.5
Level of Service	F	F	E	E	F	F	F	E	C	F	D	D
Approach Delay (s)		95.1			110.0			64.4			54.3	
Approach LOS		F			F			E			D	

Intersection Summary			
HCM Average Control Delay	71.7	HCM Level of Service	E
HCM Volume to Capacity ratio	1.01		
Actuated Cycle Length (s)	212.1	Sum of lost time (s)	20.0
Intersection Capacity Utilization	91.4%	ICU Level of Service	F
Analysis Period (min)	15		
c Critical Lane Group			

Movement	WBL	WBR	NBU	NBT	NBR	SBU	SBL	SBT
Lane Configurations								
Ideal Flow (vphpl)	1900	1900	1900	1900	1900	1900	1900	1900
Total Lost time (s)	4.0		4.0	4.0	4.0		4.0	4.0
Lane Util. Factor	1.00		1.00	0.95	1.00		1.00	0.95
Frpb, ped/bikes	0.95		1.00	1.00	0.96		1.00	1.00
Flpb, ped/bikes	1.00		1.00	1.00	1.00		1.00	1.00
Frt	0.90		1.00	1.00	0.85		1.00	1.00
Flt Protected	0.99		0.95	1.00	1.00		0.95	1.00
Satd. Flow (prot)	1609		1805	3574	1548		1805	3574
Flt Permitted	0.99		0.95	1.00	1.00		0.95	1.00
Satd. Flow (perm)	1609		1805	3574	1548		1805	3574
Volume (vph)	23	73	4	2517	14	14	21	1573
Peak-hour factor, PHF	0.80	1.00	1.00	0.97	0.80	0.80	0.80	0.97
Adj. Flow (vph)	29	73	4	2595	18	18	26	1622
RTOR Reduction (vph)	32	0	0	0	1	0	0	0
Lane Group Flow (vph)	70	0	4	2595	17	0	44	1622
Confl. Peds. (#/hr)		18			4			
Heavy Vehicles (%)	0%	0%	0%	1%	0%	0%	0%	1%
Turn Type			Prot		Perm	Prot	Prot	
Protected Phases	8		5	2		1	1	6
Permitted Phases					2			
Actuated Green, G (s)	12.5		1.1	142.9	142.9		5.5	147.3
Effective Green, g (s)	12.5		1.1	142.9	142.9		5.5	147.3
Actuated g/C Ratio	0.07		0.01	0.83	0.83		0.03	0.85
Clearance Time (s)	4.0		4.0	4.0	4.0		4.0	4.0
Vehicle Extension (s)	3.0		3.0	3.0	3.0		3.0	3.0
Lane Grp Cap (vph)	116		11	2954	1279		57	3045
v/s Ratio Prot	c0.06		0.00	c0.73			c0.02	0.45
v/s Ratio Perm					0.01			
v/c Ratio	0.60		0.36	0.88	0.01		0.77	0.53
Uniform Delay, d1	77.8		85.6	9.5	2.6		83.1	3.5
Progression Factor	1.00		1.00	1.00	1.00		1.00	1.00
Incremental Delay, d2	8.1		19.3	4.1	0.0		46.8	0.7
Delay (s)	85.9		104.8	13.6	2.7		129.9	4.1
Level of Service	F		F	B	A		F	A
Approach Delay (s)	85.9			13.7				7.5
Approach LOS	F			B				A

Intersection Summary			
HCM Average Control Delay	13.0	HCM Level of Service	B
HCM Volume to Capacity ratio	0.87		
Actuated Cycle Length (s)	172.9	Sum of lost time (s)	12.0
Intersection Capacity Utilization	86.2%	ICU Level of Service	E
Analysis Period (min)	15		
c Critical Lane Group			

Movement	WBL	WBR	NBT	NBR	SBL	SBT
Lane Configurations						
Sign Control	Stop		Free			Free
Grade	0%		0%			0%
Volume (veh/h)	0	38	2522	18	28	1573
Peak Hour Factor	0.25	0.80	0.97	0.80	0.80	0.97
Hourly flow rate (vph)	0	48	2600	22	35	1622
Pedestrians						
Lane Width (ft)						
Walking Speed (ft/s)						
Percent Blockage						
Right turn flare (veh)						
Median type	None					
Median storage veh)						
Upstream signal (ft)			700			
pX, platoon unblocked						
vC, conflicting volume	3492	1311			2622	
vC1, stage 1 conf vol						
vC2, stage 2 conf vol						
vCu, unblocked vol	3492	1311			2622	
tC, single (s)	6.8	6.9			4.1	
tC, 2 stage (s)						
tF (s)	3.5	3.3			2.2	
p0 queue free %	100	69			79	
cM capacity (veh/h)	4	152			166	

Direction, Lane #	WB 1	NB 1	NB 2	SB 1	SB 2	SB 3
Volume Total	48	1733	889	35	811	811
Volume Left	0	0	0	35	0	0
Volume Right	48	0	22	0	0	0
cSH	152	1700	1700	166	1700	1700
Volume to Capacity	0.31	1.02	0.52	0.21	0.48	0.48
Queue Length 95th (ft)	31	0	0	19	0	0
Control Delay (s)	39.1	0.0	0.0	32.5	0.0	0.0
Lane LOS	E			D		
Approach Delay (s)	39.1	0.0		0.7		
Approach LOS	E					

Intersection Summary			
Average Delay	0.7		
Intersection Capacity Utilization	80.3%	ICU Level of Service	D
Analysis Period (min)	15		

HCM Signalized Intersection Capacity Analysis
3: NE 145th St & SR 522

5/21/2015

Movement	EBL	EBT	EBR	WBL	WBT	WBR	NBL	NBT	NBR	SBL	SBT	SBR
Lane Configurations												
Ideal Flow (vphpl)	1900	1900	1900	1900	1900	1900	1900	1900	1900	1900	1900	1900
Total Lost time (s)	4.0	4.0	4.0	4.0	4.0	4.0	4.0	4.0	4.0	4.0	4.0	4.0
Lane Util. Factor	0.95	0.95	1.00	1.00	1.00	1.00	1.00	0.95	1.00	1.00	0.95	1.00
Frpb, ped/bikes	1.00	1.00	0.88	1.00	1.00	0.87	1.00	1.00	0.89	1.00	1.00	0.81
Flpb, ped/bikes	1.00	1.00	1.00	1.00	1.00	1.00	1.00	1.00	1.00	1.00	1.00	1.00
Frt	1.00	1.00	0.85	1.00	1.00	0.85	1.00	1.00	0.85	1.00	1.00	0.85
Flt Protected	0.95	0.96	1.00	0.95	1.00	1.00	0.95	1.00	1.00	0.95	1.00	1.00
Satd. Flow (prot)	1698	1716	1403	1787	1881	1396	1770	3539	1405	1787	3574	1293
Flt Permitted	0.95	0.96	1.00	0.95	1.00	1.00	0.95	1.00	1.00	0.95	1.00	1.00
Satd. Flow (perm)	1698	1716	1403	1787	1881	1396	1770	3539	1405	1787	3574	1293
Volume (vph)	804	76	113	66	112	262	105	1449	34	51	972	528
Peak-hour factor, PHF	0.98	0.98	0.98	0.98	0.98	0.98	0.98	0.98	0.98	0.98	0.98	0.98
Adj. Flow (vph)	820	78	115	67	114	267	107	1479	35	52	992	539
RTOR Reduction (vph)	0	0	42	0	0	51	0	0	4	0	0	274
Lane Group Flow (vph)	437	461	73	67	114	216	107	1479	31	52	992	265
Confl. Peds. (#/hr)			28			29			14			26
Heavy Vehicles (%)	1%	1%	1%	1%	1%	1%	2%	2%	2%	1%	1%	1%
Turn Type	Split		Perm	Split		Perm	Prot		Perm	Prot		Perm
Protected Phases	4	4		8	8		5	2		1	6	
Permitted Phases			4			8			2			6
Actuated Green, G (s)	60.2	60.2	60.2	35.1	35.1	35.1	17.5	97.2	97.2	7.0	86.7	86.7
Effective Green, g (s)	60.2	60.2	60.2	35.1	35.1	35.1	17.5	97.2	97.2	7.0	86.7	86.7
Actuated g/C Ratio	0.28	0.28	0.28	0.16	0.16	0.16	0.08	0.45	0.45	0.03	0.40	0.40
Clearance Time (s)	4.0	4.0	4.0	4.0	4.0	4.0	4.0	4.0	4.0	4.0	4.0	4.0
Vehicle Extension (s)	3.0	3.0	3.0	3.0	3.0	3.0	3.0	3.0	3.0	3.0	3.0	3.0
Lane Grp Cap (vph)	474	479	392	291	306	227	144	1596	634	58	1438	520
v/s Ratio Prot	0.26	c0.27		0.04	0.06		c0.06	c0.42		0.03	0.28	
v/s Ratio Perm			0.08			0.19			0.02			0.42
v/c Ratio	0.92	0.96	0.19	0.23	0.37	0.95	0.74	0.93	0.05	0.90	0.69	0.51
Uniform Delay, d1	75.4	76.5	59.0	78.5	80.4	89.4	96.8	55.8	33.2	103.9	53.3	48.4
Progression Factor	1.00	1.00	1.00	1.00	1.00	1.00	1.00	1.00	1.00	1.00	1.00	1.00
Incremental Delay, d2	23.5	31.5	0.2	0.4	0.8	46.0	18.6	10.8	0.1	80.9	2.7	3.5
Delay (s)	98.8	108.0	59.3	78.9	81.2	135.3	115.4	66.5	33.4	184.8	56.0	52.0
Level of Service	F	F	E	E	F	F	F	E	C	F	E	D
Approach Delay (s)		98.5			113.1			69.0			58.9	
Approach LOS		F			F			E			E	

Intersection Summary			
HCM Average Control Delay	76.2	HCM Level of Service	E
HCM Volume to Capacity ratio	1.04		
Actuated Cycle Length (s)	215.5	Sum of lost time (s)	20.0
Intersection Capacity Utilization	93.2%	ICU Level of Service	F
Analysis Period (min)	15		
c Critical Lane Group			

Movement	WBL	WBR	NBU	NBT	NBR	SBU	SBL	SBT
Lane Configurations								
Ideal Flow (vphpl)	1900	1900	1900	1900	1900	1900	1900	1900
Total Lost time (s)	4.0		4.0	4.0	4.0		4.0	4.0
Lane Util. Factor	1.00		1.00	0.95	1.00		1.00	0.95
Frpb, ped/bikes	0.95		1.00	1.00	0.96		1.00	1.00
Flpb, ped/bikes	1.00		1.00	1.00	1.00		1.00	1.00
Frt	0.90		1.00	1.00	0.85		1.00	1.00
Flt Protected	0.99		0.95	1.00	1.00		0.95	1.00
Satd. Flow (prot)	1596		1805	3574	1548		1805	3574
Flt Permitted	0.99		0.95	1.00	1.00		0.95	1.00
Satd. Flow (perm)	1596		1805	3574	1548		1805	3574
Volume (vph)	23	73	4	2518	14	14	21	1574
Peak-hour factor, PHF	0.80	0.80	0.80	0.97	1.00	0.80	0.80	0.97
Adj. Flow (vph)	29	91	5	2596	14	18	26	1623
RTOR Reduction (vph)	32	0	0	0	1	0	0	0
Lane Group Flow (vph)	88	0	5	2596	13	0	44	1623
Confl. Peds. (#/hr)		18			4			
Heavy Vehicles (%)	0%	0%	0%	1%	0%	0%	0%	1%
Turn Type			Prot		Perm	Prot	Prot	
Protected Phases	8		5	2		1	1	6
Permitted Phases					2			
Actuated Green, G (s)	14.3		1.1	142.9	142.9		5.5	147.3
Effective Green, g (s)	14.3		1.1	142.9	142.9		5.5	147.3
Actuated g/C Ratio	0.08		0.01	0.82	0.82		0.03	0.84
Clearance Time (s)	4.0		4.0	4.0	4.0		4.0	4.0
Vehicle Extension (s)	3.0		3.0	3.0	3.0		3.0	3.0
Lane Grp Cap (vph)	131		11	2923	1266		57	3013
v/s Ratio Prot	c0.08		0.00	c0.73			c0.02	0.45
v/s Ratio Perm					0.01			
v/c Ratio	0.67		0.45	0.89	0.01		0.77	0.54
Uniform Delay, d1	77.9		86.5	10.6	2.9		84.0	3.9
Progression Factor	1.00		1.00	1.00	1.00		1.00	1.00
Incremental Delay, d2	12.7		27.0	4.5	0.0		46.8	0.7
Delay (s)	90.6		113.5	15.1	2.9		130.8	4.6
Level of Service	F		F	B	A		F	A
Approach Delay (s)	90.6			15.2				8.0
Approach LOS	F			B				A

Intersection Summary			
HCM Average Control Delay	14.5	HCM Level of Service	B
HCM Volume to Capacity ratio	0.89		
Actuated Cycle Length (s)	174.7	Sum of lost time (s)	12.0
Intersection Capacity Utilization	86.2%	ICU Level of Service	E
Analysis Period (min)	15		
c Critical Lane Group			

Movement	WBL	WBR	NBT	NBR	SBL	SBT
Lane Configurations						
Sign Control	Stop		Free			Free
Grade	0%		0%			0%
Volume (veh/h)	0	39	2522	22	29	1573
Peak Hour Factor	0.25	0.80	0.97	0.80	0.80	0.97
Hourly flow rate (vph)	0	49	2600	28	36	1622
Pedestrians						
Lane Width (ft)						
Walking Speed (ft/s)						
Percent Blockage						
Right turn flare (veh)						
Median type	None					
Median storage veh)						
Upstream signal (ft)			700			
pX, platoon unblocked						
vC, conflicting volume	3497	1314			2628	
vC1, stage 1 conf vol						
vC2, stage 2 conf vol						
vCu, unblocked vol	3497	1314			2628	
tC, single (s)	6.8	6.9			4.1	
tC, 2 stage (s)						
tF (s)	3.5	3.3			2.2	
p0 queue free %	100	68			78	
cM capacity (veh/h)	4	151			165	

Direction, Lane #	WB 1	NB 1	NB 2	SB 1	SB 2	SB 3
Volume Total	49	1733	894	36	811	811
Volume Left	0	0	0	36	0	0
Volume Right	49	0	28	0	0	0
cSH	151	1700	1700	165	1700	1700
Volume to Capacity	0.32	1.02	0.53	0.22	0.48	0.48
Queue Length 95th (ft)	32	0	0	20	0	0
Control Delay (s)	39.7	0.0	0.0	32.9	0.0	0.0
Lane LOS	E			D		
Approach Delay (s)	39.7	0.0		0.7		
Approach LOS	E					

Intersection Summary			
Average Delay	0.7		
Intersection Capacity Utilization	80.4%	ICU Level of Service	D
Analysis Period (min)	15		

HCM Signalized Intersection Capacity Analysis
3: NE 145th St & SR 522

5/21/2015

Movement	EBL	EBT	EBR	WBL	WBT	WBR	NBL	NBT	NBR	SBL	SBT	SBR
Lane Configurations												
Ideal Flow (vphpl)	1900	1900	1900	1900	1900	1900	1900	1900	1900	1900	1900	1900
Total Lost time (s)	4.0	4.0	4.0	4.0	4.0	4.0	4.0	4.0	4.0	4.0	4.0	4.0
Lane Util. Factor	0.95	0.95	1.00	1.00	1.00	1.00	1.00	0.95	1.00	1.00	0.95	1.00
Frpb, ped/bikes	1.00	1.00	0.88	1.00	1.00	0.87	1.00	1.00	0.89	1.00	1.00	0.81
Flpb, ped/bikes	1.00	1.00	1.00	1.00	1.00	1.00	1.00	1.00	1.00	1.00	1.00	1.00
Frt	1.00	1.00	0.85	1.00	1.00	0.85	1.00	1.00	0.85	1.00	1.00	0.85
Flt Protected	0.95	0.96	1.00	0.95	1.00	1.00	0.95	1.00	1.00	0.95	1.00	1.00
Satd. Flow (prot)	1698	1716	1402	1787	1881	1396	1770	3539	1405	1787	3574	1292
Flt Permitted	0.95	0.96	1.00	0.95	1.00	1.00	0.95	1.00	1.00	0.95	1.00	1.00
Satd. Flow (perm)	1698	1716	1402	1787	1881	1396	1770	3539	1405	1787	3574	1292
Volume (vph)	806	79	113	67	113	262	105	1451	34	51	972	528
Peak-hour factor, PHF	0.98	0.98	0.98	0.98	0.98	0.98	0.98	0.98	0.98	0.98	0.98	0.98
Adj. Flow (vph)	822	81	115	68	115	267	107	1481	35	52	992	539
RTOR Reduction (vph)	0	0	42	0	0	51	0	0	4	0	0	274
Lane Group Flow (vph)	440	463	73	68	115	216	107	1481	31	52	992	265
Confl. Peds. (#/hr)			28			29			14			26
Heavy Vehicles (%)	1%	1%	1%	1%	1%	1%	2%	2%	2%	1%	1%	1%
Turn Type	Split		Perm	Split		Perm	Prot		Perm	Prot		Perm
Protected Phases	4	4		8	8		5	2		1	6	
Permitted Phases			4			8			2			6
Actuated Green, G (s)	60.4	60.4	60.4	35.2	35.2	35.2	17.6	97.2	97.2	7.0	86.6	86.6
Effective Green, g (s)	60.4	60.4	60.4	35.2	35.2	35.2	17.6	97.2	97.2	7.0	86.6	86.6
Actuated g/C Ratio	0.28	0.28	0.28	0.16	0.16	0.16	0.08	0.45	0.45	0.03	0.40	0.40
Clearance Time (s)	4.0	4.0	4.0	4.0	4.0	4.0	4.0	4.0	4.0	4.0	4.0	4.0
Vehicle Extension (s)	3.0	3.0	3.0	3.0	3.0	3.0	3.0	3.0	3.0	3.0	3.0	3.0
Lane Grp Cap (vph)	475	480	392	291	307	228	144	1594	633	58	1434	518
v/s Ratio Prot	0.26	c0.27		0.04	0.06		c0.06	c0.42		0.03	0.28	
v/s Ratio Perm			0.08			0.19			0.02			0.42
v/c Ratio	0.93	0.96	0.19	0.23	0.37	0.95	0.74	0.93	0.05	0.90	0.69	0.51
Uniform Delay, d1	75.5	76.6	59.0	78.6	80.5	89.4	96.9	56.0	33.3	104.0	53.5	48.7
Progression Factor	1.00	1.00	1.00	1.00	1.00	1.00	1.00	1.00	1.00	1.00	1.00	1.00
Incremental Delay, d2	24.1	31.9	0.2	0.4	0.8	44.5	18.6	11.0	0.1	80.9	2.8	3.6
Delay (s)	99.6	108.5	59.3	79.0	81.3	133.9	115.5	67.0	33.5	185.0	56.3	52.2
Level of Service	F	F	E	E	F	F	F	E	C	F	E	D
Approach Delay (s)		99.1			112.2			69.5			59.1	
Approach LOS		F			F			E			E	

Intersection Summary			
HCM Average Control Delay	76.6	HCM Level of Service	E
HCM Volume to Capacity ratio	1.04		
Actuated Cycle Length (s)	215.8	Sum of lost time (s)	20.0
Intersection Capacity Utilization	93.4%	ICU Level of Service	F
Analysis Period (min)	15		
c Critical Lane Group			

ATTACHMENT 4

Queue Results

Lane Group	WBL	NBU	NBT	NBR	SBL	SBT
Lane Group Flow (vph)	47	24	1189	26	52	2193
v/c Ratio	0.47	0.40	1.11	0.06	1.21	0.71
Control Delay	57.4	101.4	117.1	37.9	238.6	6.2
Queue Delay	0.0	0.0	0.0	0.0	0.0	0.0
Total Delay	57.4	101.4	117.1	37.9	238.6	6.2
Queue Length 50th (ft)	32	27	~814	17	~72	439
Queue Length 95th (ft)	68	64	#993	39	#106	600
Internal Link Dist (ft)	556		1571			1361
Turn Bay Length (ft)		260		90	250	
Base Capacity (vph)	161	61	1068	445	43	3101
Starvation Cap Reductn	0	0	0	0	0	0
Spillback Cap Reductn	0	0	0	0	0	0
Storage Cap Reductn	0	0	0	0	0	0
Reduced v/c Ratio	0.29	0.39	1.11	0.06	1.21	0.71

Intersection Summary

~ Volume exceeds capacity, queue is theoretically infinite.
Queue shown is maximum after two cycles.

95th percentile volume exceeds capacity, queue may be longer.
Queue shown is maximum after two cycles.

Queues
3: NE 145th St & SR 522

5/21/2015

Lane Group	EBL	EBT	EBR	WBL	WBT	WBR	NBL	NBT	NBR	SBL	SBT	SBR
Lane Group Flow (vph)	251	264	159	30	69	25	181	855	11	27	1484	550
v/c Ratio	0.85	0.88	0.42	0.25	0.55	0.20	0.82	0.38	0.01	0.39	0.79	0.59
Control Delay	78.4	80.0	11.6	79.0	84.2	26.3	86.0	16.2	10.3	97.7	37.7	7.8
Queue Delay	0.0	0.0	0.0	0.0	0.0	0.0	0.0	0.0	0.0	0.0	0.0	0.0
Total Delay	78.4	80.0	11.6	79.0	84.2	26.3	86.0	16.2	10.3	97.7	37.7	7.8
Queue Length 50th (ft)	290	307	5	33	78	0	202	261	2	31	757	52
Queue Length 95th (ft)	#431	#465	76	72	137	35	#321	335	13	71	933	186
Internal Link Dist (ft)		957			1019			1498			620	
Turn Bay Length (ft)			230	110		200	530		110	320		400
Base Capacity (vph)	348	352	419	166	175	159	260	2271	941	73	1875	929
Starvation Cap Reductn	0	0	0	0	0	0	0	0	0	0	0	0
Spillback Cap Reductn	0	0	0	0	0	0	0	0	0	0	0	0
Storage Cap Reductn	0	0	0	0	0	0	0	0	0	0	0	0
Reduced v/c Ratio	0.72	0.75	0.38	0.18	0.39	0.16	0.70	0.38	0.01	0.37	0.79	0.59

Intersection Summary

95th percentile volume exceeds capacity, queue may be longer.
Queue shown is maximum after two cycles.

Lane Group	WBL	NBU	NBT	NBR	SBL	SBT
Lane Group Flow (vph)	50	24	1219	28	53	2241
v/c Ratio	0.49	0.40	1.12	0.06	1.23	0.72
Control Delay	60.2	101.9	119.8	36.8	251.1	6.7
Queue Delay	0.0	0.0	0.0	0.0	0.0	0.0
Total Delay	60.2	101.9	119.8	36.8	251.1	6.7
Queue Length 50th (ft)	37	27	~842	18	~75	475
Queue Length 95th (ft)	74	64	#1023	41	#110	651
Internal Link Dist (ft)	556		1571			1361
Turn Bay Length (ft)		260		90	250	
Base Capacity (vph)	160	61	1086	453	43	3094
Starvation Cap Reductn	0	0	0	0	0	0
Spillback Cap Reductn	0	0	0	0	0	0
Storage Cap Reductn	0	0	0	0	0	0
Reduced v/c Ratio	0.31	0.39	1.12	0.06	1.23	0.72

Intersection Summary

~ Volume exceeds capacity, queue is theoretically infinite.
Queue shown is maximum after two cycles.

95th percentile volume exceeds capacity, queue may be longer.
Queue shown is maximum after two cycles.

Lane Group	EBL	EBT	EBR	WBL	WBT	WBR	NBL	NBT	NBR	SBL	SBT	SBR
Lane Group Flow (vph)	259	272	160	39	79	32	182	864	18	31	1499	660
v/c Ratio	0.85	0.88	0.42	0.31	0.59	0.24	0.84	0.40	0.02	0.42	0.83	0.69
Control Delay	80.6	82.2	12.5	80.4	86.5	24.2	91.8	18.8	9.9	96.0	40.8	9.6
Queue Delay	0.0	0.0	0.0	0.0	0.0	0.0	0.0	0.0	0.0	0.0	0.0	0.0
Total Delay	80.6	82.2	12.5	80.4	86.5	24.2	91.8	18.8	9.9	96.0	40.8	9.6
Queue Length 50th (ft)	301	317	8	43	89	0	205	277	4	35	791	79
Queue Length 95th (ft)	#433	#472	80	88	153	39	#336	350	17	78	950	252
Internal Link Dist (ft)		957			1019			1498			620	
Turn Bay Length (ft)			230	110		200	530		110	320		400
Base Capacity (vph)	348	353	416	165	173	164	243	2142	890	81	1813	955
Starvation Cap Reductn	0	0	0	0	0	0	0	0	0	0	0	0
Spillback Cap Reductn	0	0	0	0	0	0	0	0	0	0	0	0
Storage Cap Reductn	0	0	0	0	0	0	0	0	0	0	0	0
Reduced v/c Ratio	0.74	0.77	0.38	0.24	0.46	0.20	0.75	0.40	0.02	0.38	0.83	0.69

Intersection Summary

95th percentile volume exceeds capacity, queue may be longer.
Queue shown is maximum after two cycles.

Lane Group	WBL	NBU	NBT	NBR	SBL	SBT
Lane Group Flow (vph)	50	24	1221	28	53	2241
v/c Ratio	0.49	0.40	1.12	0.06	1.23	0.72
Control Delay	60.2	101.9	120.4	36.8	251.1	6.7
Queue Delay	0.0	0.0	0.0	0.0	0.0	0.0
Total Delay	60.2	101.9	120.4	36.8	251.1	6.7
Queue Length 50th (ft)	37	27	~844	18	~75	475
Queue Length 95th (ft)	74	64	#1025	41	#110	651
Internal Link Dist (ft)	556		1571			1361
Turn Bay Length (ft)		260		90	250	
Base Capacity (vph)	160	61	1086	453	43	3094
Starvation Cap Reductn	0	0	0	0	0	0
Spillback Cap Reductn	0	0	0	0	0	0
Storage Cap Reductn	0	0	0	0	0	0
Reduced v/c Ratio	0.31	0.39	1.12	0.06	1.23	0.72

Intersection Summary

~ Volume exceeds capacity, queue is theoretically infinite.
Queue shown is maximum after two cycles.

95th percentile volume exceeds capacity, queue may be longer.
Queue shown is maximum after two cycles.

Queues
3: NE 145th St & SR 522

5/21/2015

Lane Group	EBL	EBT	EBR	WBL	WBT	WBR	NBL	NBT	NBR	SBL	SBT	SBR
Lane Group Flow (vph)	260	273	160	41	81	32	182	864	18	31	1499	660
v/c Ratio	0.86	0.88	0.42	0.32	0.60	0.24	0.84	0.40	0.02	0.42	0.83	0.69
Control Delay	80.9	82.6	12.7	80.7	86.9	24.2	91.9	18.9	9.9	96.3	41.0	9.6
Queue Delay	0.0	0.0	0.0	0.0	0.0	0.0	0.0	0.0	0.0	0.0	0.0	0.0
Total Delay	80.9	82.6	12.7	80.7	86.9	24.2	91.9	18.9	9.9	96.3	41.0	9.6
Queue Length 50th (ft)	303	320	9	46	92	0	205	278	4	35	794	80
Queue Length 95th (ft)	#445	#477	81	91	156	39	#336	350	17	78	950	252
Internal Link Dist (ft)		957			1019			1498			620	
Turn Bay Length (ft)			230	110		200	530		110	320		400
Base Capacity (vph)	347	352	416	165	173	164	243	2139	889	81	1810	954
Starvation Cap Reductn	0	0	0	0	0	0	0	0	0	0	0	0
Spillback Cap Reductn	0	0	0	0	0	0	0	0	0	0	0	0
Storage Cap Reductn	0	0	0	0	0	0	0	0	0	0	0	0
Reduced v/c Ratio	0.75	0.78	0.38	0.25	0.47	0.20	0.75	0.40	0.02	0.38	0.83	0.69

Intersection Summary

95th percentile volume exceeds capacity, queue may be longer.
Queue shown is maximum after two cycles.

Lane Group	WBL	NBU	NBT	NBR	SBL	SBT
Lane Group Flow (vph)	101	4	2563	18	44	1597
v/c Ratio	0.68	0.10	0.96	0.02	1.02	0.51
Control Delay	48.8	92.5	29.8	5.0	211.9	3.2
Queue Delay	0.0	0.0	0.0	0.0	0.0	0.0
Total Delay	48.8	92.5	29.8	5.0	211.9	3.2
Queue Length 50th (ft)	53	5	1246	3	~53	133
Queue Length 95th (ft)	101	20	#1726	10	#130	308
Internal Link Dist (ft)	556		1571			1361
Turn Bay Length (ft)		260		90	250	
Base Capacity (vph)	192	40	2681	1162	43	3161
Starvation Cap Reductn	0	0	0	0	0	0
Spillback Cap Reductn	0	0	0	0	0	0
Storage Cap Reductn	0	0	0	0	0	0
Reduced v/c Ratio	0.53	0.10	0.96	0.02	1.02	0.51

Intersection Summary

~ Volume exceeds capacity, queue is theoretically infinite.
Queue shown is maximum after two cycles.

95th percentile volume exceeds capacity, queue may be longer.
Queue shown is maximum after two cycles.

Lane Group	EBL	EBT	EBR	WBL	WBT	WBR	NBL	NBT	NBR	SBL	SBT	SBR
Lane Group Flow (vph)	424	447	114	57	97	256	106	1464	22	43	982	534
v/c Ratio	0.91	0.95	0.27	0.20	0.33	0.94	0.74	0.90	0.03	0.73	0.67	0.67
Control Delay	91.4	96.2	29.9	80.2	82.7	95.0	109.8	62.7	28.8	155.7	55.7	12.6
Queue Delay	0.0	0.0	0.0	0.0	0.0	0.0	0.0	0.0	0.0	0.0	0.0	0.0
Total Delay	91.4	96.2	29.9	80.2	82.7	95.0	109.8	62.7	28.8	155.7	55.7	12.6
Queue Length 50th (ft)	624	667	59	72	126	289	153	1067	14	63	634	83
Queue Length 95th (ft)	#827	#896	125	125	196	#472	231	1175	36	#149	738	248
Internal Link Dist (ft)		957			1019			1498			620	
Turn Bay Length (ft)			230	110		200	530		110	320		400
Base Capacity (vph)	494	498	450	307	323	291	180	1624	646	59	1468	798
Starvation Cap Reductn	0	0	0	0	0	0	0	0	0	0	0	0
Spillback Cap Reductn	0	0	0	0	0	0	0	0	0	0	0	0
Storage Cap Reductn	0	0	0	0	0	0	0	0	0	0	0	0
Reduced v/c Ratio	0.86	0.90	0.25	0.19	0.30	0.88	0.59	0.90	0.03	0.73	0.67	0.67

Intersection Summary

95th percentile volume exceeds capacity, queue may be longer.
Queue shown is maximum after two cycles.

Lane Group	WBL	NBU	NBT	NBR	SBL	SBT
Lane Group Flow (vph)	102	4	2595	18	44	1622
v/c Ratio	0.68	0.10	0.96	0.02	1.00	0.51
Control Delay	48.6	92.5	30.0	4.8	211.1	3.2
Queue Delay	0.0	0.0	0.0	0.0	0.0	0.0
Total Delay	48.6	92.5	30.0	4.8	211.1	3.2
Queue Length 50th (ft)	53	5	1272	3	~52	138
Queue Length 95th (ft)	101	20	#1753	10	#129	317
Internal Link Dist (ft)	556		1571			1361
Turn Bay Length (ft)		260		90	250	
Base Capacity (vph)	193	40	2701	1170	44	3161
Starvation Cap Reductn	0	0	0	0	0	0
Spillback Cap Reductn	0	0	0	0	0	0
Storage Cap Reductn	0	0	0	0	0	0
Reduced v/c Ratio	0.53	0.10	0.96	0.02	1.00	0.51

Intersection Summary

~ Volume exceeds capacity, queue is theoretically infinite.
Queue shown is maximum after two cycles.

95th percentile volume exceeds capacity, queue may be longer.
Queue shown is maximum after two cycles.

Lane Group	EBL	EBT	EBR	WBL	WBT	WBR	NBL	NBT	NBR	SBL	SBT	SBR
Lane Group Flow (vph)	437	461	115	67	114	267	107	1479	35	52	992	539
v/c Ratio	0.92	0.96	0.27	0.23	0.37	0.96	0.74	0.93	0.06	0.90	0.69	0.68
Control Delay	95.9	101.6	31.1	81.1	84.4	104.1	111.7	67.2	29.3	188.1	57.9	13.3
Queue Delay	0.0	0.0	0.0	0.0	0.0	0.0	0.0	0.0	0.0	0.0	0.0	0.0
Total Delay	95.9	101.6	31.1	81.1	84.4	104.1	111.7	67.2	29.3	188.1	57.9	13.3
Queue Length 50th (ft)	649	695	63	86	149	310	155	1086	23	77	644	92
Queue Length 95th (ft)	#868	#942	127	143	225	#511	231	#1198	51	#185	748	259
Internal Link Dist (ft)		957			1019			1498			620	
Turn Bay Length (ft)			230	110		200	530		110	320		400
Base Capacity (vph)	490	495	445	305	320	288	177	1595	636	58	1437	791
Starvation Cap Reductn	0	0	0	0	0	0	0	0	0	0	0	0
Spillback Cap Reductn	0	0	0	0	0	0	0	0	0	0	0	0
Storage Cap Reductn	0	0	0	0	0	0	0	0	0	0	0	0
Reduced v/c Ratio	0.89	0.93	0.26	0.22	0.36	0.93	0.60	0.93	0.06	0.90	0.69	0.68

Intersection Summary

95th percentile volume exceeds capacity, queue may be longer.
Queue shown is maximum after two cycles.

Lane Group	WBL	NBU	NBT	NBR	SBL	SBT
Lane Group Flow (vph)	120	5	2596	14	44	1623
v/c Ratio	0.73	0.12	0.96	0.01	1.02	0.51
Control Delay	47.4	94.2	30.6	4.9	212.5	3.3
Queue Delay	0.0	0.0	0.0	0.0	0.0	0.0
Total Delay	47.4	94.2	30.6	4.9	212.5	3.3
Queue Length 50th (ft)	58	6	1291	3	~53	143
Queue Length 95th (ft)	109	20	#1754	10	#129	318
Internal Link Dist (ft)	556		1571			1361
Turn Bay Length (ft)		260		90	250	
Base Capacity (vph)	205	40	2697	1168	43	3155
Starvation Cap Reductn	0	0	0	0	0	0
Spillback Cap Reductn	0	0	0	0	0	0
Storage Cap Reductn	0	0	0	0	0	0
Reduced v/c Ratio	0.59	0.13	0.96	0.01	1.02	0.51

Intersection Summary

~ Volume exceeds capacity, queue is theoretically infinite.
Queue shown is maximum after two cycles.

95th percentile volume exceeds capacity, queue may be longer.
Queue shown is maximum after two cycles.

Lane Group	EBL	EBT	EBR	WBL	WBT	WBR	NBL	NBT	NBR	SBL	SBT	SBR
Lane Group Flow (vph)	440	463	115	68	115	267	107	1481	35	52	992	539
v/c Ratio	0.93	0.96	0.27	0.23	0.38	0.96	0.74	0.93	0.06	0.90	0.69	0.68
Control Delay	96.7	102.2	31.1	81.2	84.5	104.3	111.8	67.5	29.3	188.1	58.0	13.3
Queue Delay	0.0	0.0	0.0	0.0	0.0	0.0	0.0	0.0	0.0	0.0	0.0	0.0
Total Delay	96.7	102.2	31.1	81.2	84.5	104.3	111.8	67.5	29.3	188.1	58.0	13.3
Queue Length 50th (ft)	655	700	63	87	151	310	155	1089	23	77	644	92
Queue Length 95th (ft)	#881	#945	127	146	225	#511	231	#1201	51	#185	748	259
Internal Link Dist (ft)		957			1019			1498			620	
Turn Bay Length (ft)			230	110		200	530		110	320		400
Base Capacity (vph)	490	495	445	305	320	288	177	1594	635	58	1435	791
Starvation Cap Reductn	0	0	0	0	0	0	0	0	0	0	0	0
Spillback Cap Reductn	0	0	0	0	0	0	0	0	0	0	0	0
Storage Cap Reductn	0	0	0	0	0	0	0	0	0	0	0	0
Reduced v/c Ratio	0.90	0.94	0.26	0.22	0.36	0.93	0.60	0.93	0.06	0.90	0.69	0.68

Intersection Summary

95th percentile volume exceeds capacity, queue may be longer.
Queue shown is maximum after two cycles.

ATTACHMENT 5

Site Access Sight Distance Sketch

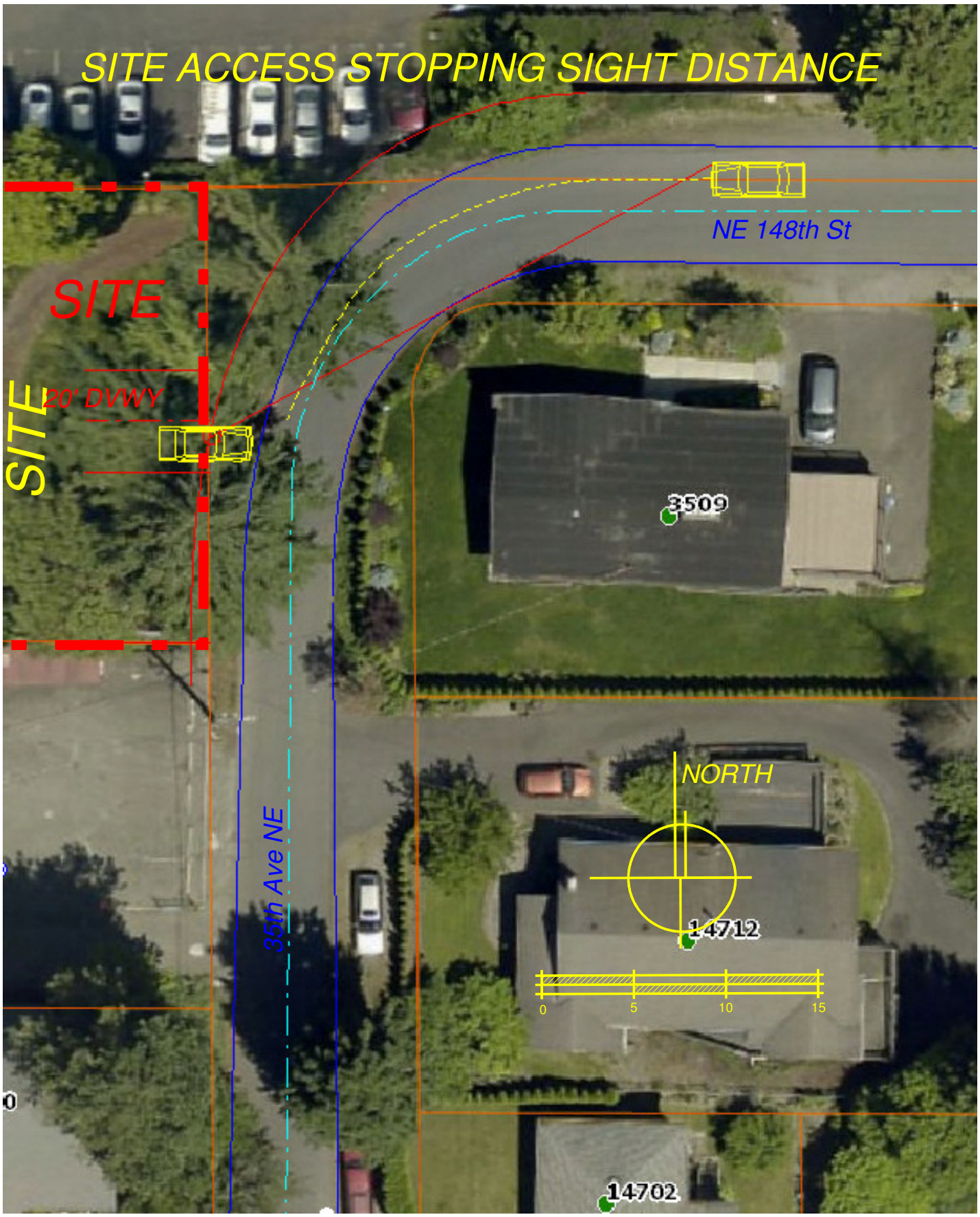
SITE ACCESS STOPPING SIGHT DISTANCE
NE 148th St
SITE
20' DVWY
SITE
3509
NORTH
35th Ave NE
14712
0
5
10
15
14702